City of Jefferson
DEPARTMENT OF PUBLIC WORKS
ENGINEERING DIVISION

CITY OF JEFFERSON STANDARD DRAWINGS

REVISED : 1/2013

7TH EDITION

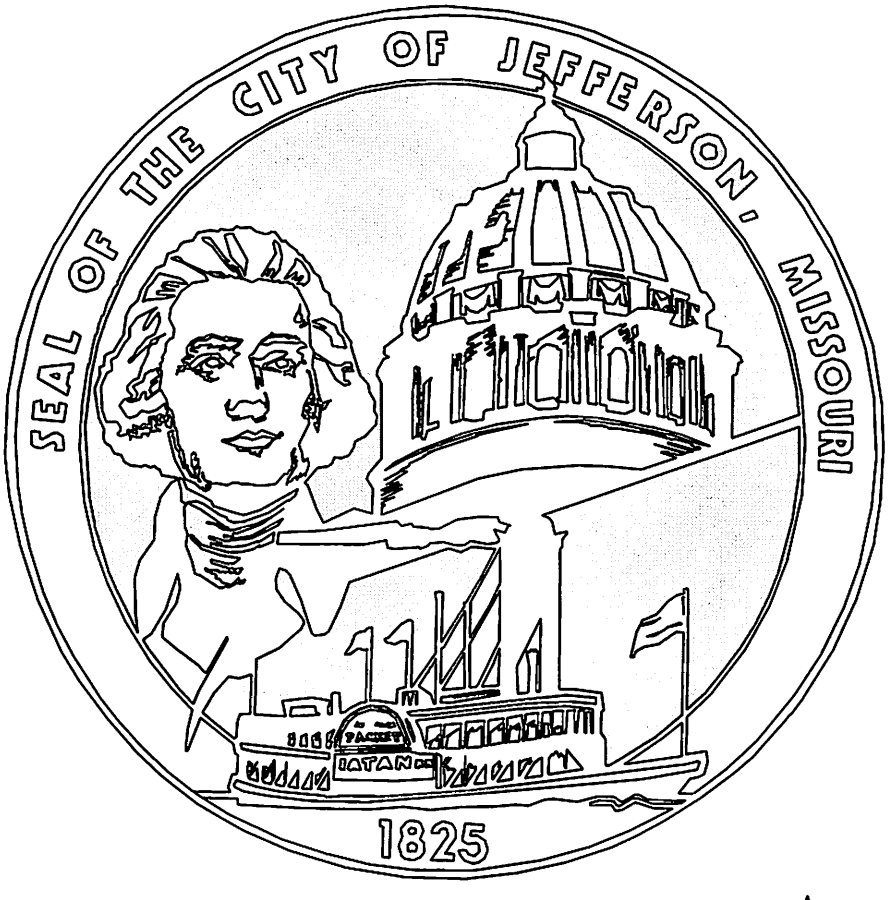

City of Jefferson
DEPARTMENT OF PUBLIC WORKS
ENGINEERING DIVISION
320 E. McCarty Street
Jefferson City, Missouri, 65101
Ph:(573)634-6410
Fax:(573)634-6562

FOR FREE DOWNLOAD, GO TO CITY OF JEFFERSON WEB SITE:
http://www.jeffcitymo.org/publicworks/engineering.html

INDEX OF SHEETS

DIVISION III PIPE EMBEDMENT

DESCRIPTION:	SECTION NUMBER
PIPE EMBEDMENT	30.00
SANITARY SEWER AND STORMWATER PIPE EMBEDMENT DETAILS	30.01
CORRUGATED METAL PIPE SPECIFICATIONS & CONNECTING BAND SIZES	30.02

DIVISION IV STORMWATER

DESCRIPTION:	SECTION NUMBER
TYPE "A" & "C" INLETS	41.00
INLET NOTES, TYPE "A" & "C", AND EDGE ANGLE ASSEMBLY DETAILS	41.01
DEFLECTOR DETAILS FOR TYPE "A" & "C" INLETS	41.02
TYPE "A" INLET DETAILS, (PLAN VIEW)	42.01
TYPE "A" INLET DETAILS, (SECTION A-A)	42.02
TYPE "A" INLET DETAILS, (SECTION B-B & C-C)	42.03
TYPE "C" INLET DETAILS, (PLAN VIEW)	43.01
TYPE "C" INLET DETAILS, (SECTION A-A)	43.02
TYPE "C" INLET DETAILS, (SECTION B-B & C-C)	43.03
TYPE "C" INLET ISOMETRIC VIEWS	43.04
AREA INLETS & JUNCTION BOXES	44.00
JUNCTION BOX DETAILS	44.01
AREA INLET DETAILS	44.02
GRATE INLET DETAILS	44.03
CONCRETE FLUME DETAILS	45.01
CONCRETE CHANNELS	46.01
IMPROVED CHANNELS	47.01
CONCRETE END SECTION	48.00
CONCRETE END SECTION DETAILS	48.01-48.03

* Denotes Modification/Addition for year 2013 City of Jefferson Standards

FOR FREE DOWNLOAD, GO TO CITY OF JEFFERSON WEB SITE:
http://www.jeffcitymo.org/publicworks/engineering.html

For comments or corrections please E-Mail at: jcengineering@jeffcitymo.org

City of Jefferson
DEPARTMENT OF PUBLIC WORKS
ENGINEERING DIVISION
320 E. McCarty Street
Jefferson City, Missouri, 65101
Ph:(573)634-6410
Fax:(573)634-6562

CONSTRUCTION SEQUENCE

1. PLACE BEDDING MATERIAL TO GRADE.
2. COMPACT BEDDING OUTSIDE THE MIDDLE THIRD OF THE PIPE.
3. INSTALL PIPE TO GRADE.
4. PLACE AND COMPACT THE HAUNCH AREA UP TO THE SPRINGLINE.
5. COMPLETE BACKFILL ACCORDING TO SPECIFICATIONS.

LEGEND

= UNDISTURBED SOIL

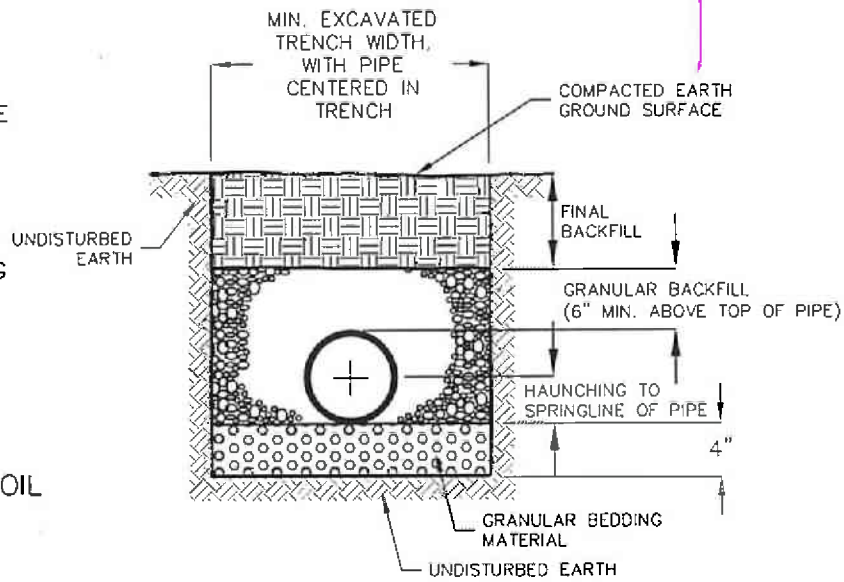

TYPICAL TRENCH DETAIL FOR H.D.P.E. PIPE INSTALLATION

ALL H.D.P.E. PIPE SHALL HAVE WATER TIGHT GASKET CONNECTIONS

TABLE I
HIGH DENSITY POLYETHYLENE PIPE

SPECIFIED DIA OF PIPE (IN.)	MIN OVERFILL HEIGHT (FT)	MAX OVERFILL HEIGHT* (FT)	MIN. TRENCH WIDTH (IN.)
12	1	38	34
15	1	39	38
18	1	40	44
24	1	40	54
30	1	40	66
36	1	38	78
42	2	10	84
48	2	9	91

* MAXIMUM OVERFILL MEASURED FROM THE TOP OF PIPE TO SURFACE.

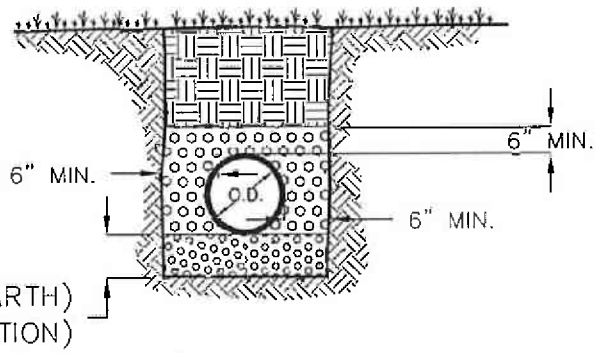

TYPICAL PIPE EMBEDMENT
R.C.P., C.M.P., V.C.P., P.V.C.

GRADATION FOR GRANULAR BEDDING MATERIAL, ASTM STANDARD C33

	SIEVE SIZE	% PASSING
PASSING	3/4"	90 – 100%
PASSING	1/2"	------
PASSING	3/8"	20 – 55%
PASSING	NO. 4	0 – 10%
PASSING	NO. 8	0 – 10%

NOTES:

1. ALL TRENCHES UNDER PAVED SURFACES SHALL BE BROUGHT TO THE LEVEL OF THE SUBGRADE WITH GRANULAR MATERIAL. UNLESS OTHERWISE APPROVED BY THE CITY ENGINEER.
2. GRANULAR MATERIAL MAY CONSIST OF 1" CLEAN ROCK, OR GRADATION FOR GRANULAR BEDDING MATERIAL, ASTM STANDARD C33.

NO:	DATE:	REVISION AND DESCRIPTION
1	8/2007	REVISED TYPICAL PIPE EMBEDMENT FOR RCP, CMP, VCP, AND PVC

SANITARY SEWER AND STORMWATER PIPE EMBEDMENT DETAILS

CHECKED BY:
DRAWN BY:
DATE:

City of Jefferson
DEPARTMENT OF PUBLIC WORKS
ENGINEERING DIVISION

SHEET NUMBER
1 OF 1
SECTION
30.01

30.01.DWG

ALL CORRUGATED METAL PIPE SHALL BE TYPE 2 ANGULAR RIVETED ALUMINIZED STEEL

MINIMUM GUAGE SPECIFICATIONS
FOR CORRUGATED METAL PIPE
(CIRCULAR CULVERT PIPE)

PIPE DIAMETER	2 2/3 CORR. GUAGE	MINIMUM COVER	3 x 1 CORR. GUAGE	MINIMUM COVER	BAND WIDTH	PIPE DIAMETER
15"	16	12"			12"	15"
18"						18"
21"						21"
24"						24"
30"	14					30"
36"						36"
42"	12		14	12"		42"
48"						48"
54"					24"	54"
60"	10					60"
66"						66"
72"						72"
78"			12			78"
84"						84"
90"						90"
96"						96"
102"				24"		102"
108"						108"
114"						114"
120"						120"

MINIMUM GUAGE SPECIFICATIONS
FOR CORRUGATED METAL PIPE
(ARCHED CULVERT PIPE)

PIPE ARCH SPAN & RISE	2 2/3 CORR. GUAGE	MINIMUM COVER	3 x 1 CORR. GUAGE	MINIMUM COVER	BAND WIDTH	PIPE ARCH SPAN & RISE
17" x 13"	16	12"			12"	17" x 13"
21" x 15"						21" x 15"
24" x 18"						24" x 18"
28" x 20"	14					28" x 20"
35" x 24"						35" x 24"
42" x 29"						42" x 29"
49" x 53"	12					49" x 53"
57" x 38"						57" x 38"
64" x 43"					24"	64" x 43"
60" x 46"			14	12"		60" x 46"
66" x 51"						66" x 51"
73" x 55"			12			73" x 55"
81" x 59"						81" x 59"
87" x 63"						87" x 63"
95" x 67"				24"		95" x 67"
103" x 71"						103" x 71"
112" x 75"						112" x 75"
117" x 79"						117" x 79"
128" x 83"						128" x 83"
137" x 87"						137" x 87"
142" x 91"			10			142" x 91"

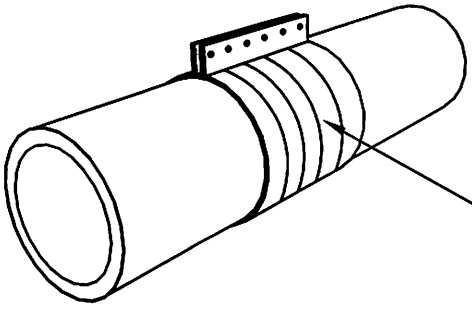

CMP Connecting Bands:
12"-48" DIA. PIPES AT 12" WIDE.
54" -144" DIA. PIPES AT 24" WIDE.

30.02.DWG

NO:	DATE:	REVISION AND DESCRIPTION

CMP MINIMUM PIPE SPECIFICATIONS AND CONNECTING BAND SIZES

CHECKED BY:
DRAWN BY:
DATE:

City of Jefferson
DEPARTMENT OF PUBLIC WORKS
ENGINEERING DIVISION

SHEET NUMBER
1 OF 1
SECTION
30.02

STORMWATER NOTES:

1. Dimensions "L" and "W" given on plans as "L" x "W" (typ.).
2. Dimensions of upstream and downstream gutter transitions shall be as detailed unless otherwise specified on the plans.
3. Gutter transitions on inlets in a sump shall be 10' on both sides of inlet unless otherwise specified on the plans.
4. Gutter transitions shall be transition uniformly between standard curb and gutter and the inlet wall.
5. Expansion joints and dowel placement between curb and gutter and inlet transition shall be the same as that shown on Type "A" Curb and Gutter detail.
6. Gutter deflectors (see detail) are required when street slope is 5% or greater.
7. After initial set, remove deflector channel forms and finish surface of concrete.
8. Ring and cover casting (NEENAH R-5900-F typ. see detail) should be located on the downstream side of curb inlet lid.
9. Use 3/4" chamfer strip on all exposed concrete corners.
10. Curb inlets shall include an edge angle assembly with trash rod (see detail).
11. Inlets shall have a 4" weep hole in every side which also contains a stormwater pipe. The weep holes shall be be covered with a 12" x 12" filter fabric reinforced by a similarly sized piece of geogrid or wire fabric. The fabric and grid should be firmly attached to the outside of the inlet wall with mastic or by other approved means.
12. All inlets shall have inverts installed to provide for the smooth transition of water to the outlet pipe (see MoDOT typical invert details)
13. All reinforcement steel shall be 1 1/2" clear of concrete surface, unless otherwise shown.
14. Reinforcing steel shall be bent around pipe opening when possible. If steel is cut, a diagonal bar shall be used to tie all cut ends together.
15. Where the concrete lid is integral to the sidewalk (i.e. part of the sidewalk), #4 bars shall be installed on 12" centers to tie into the sidewalk and lid. In the case that the concrete lid is within 18" of the edge of the sidewalk, the lid shall be extended to the edge of the sidewalk.
16. Precast lids shall not be used.
17. Inlet lid shall be sloped to match the longitudinal slope of the street.
18. Pan shall be paid as Type "A" Curb and Gutter for City of Jefferson Projects

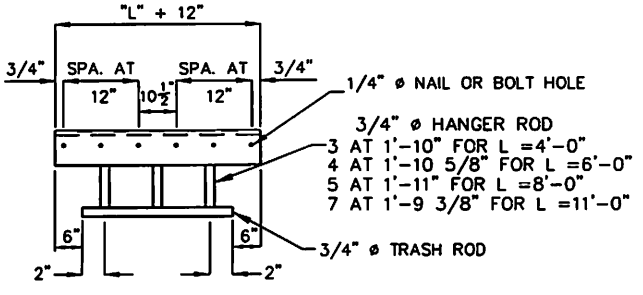

FRONT ELEVATION

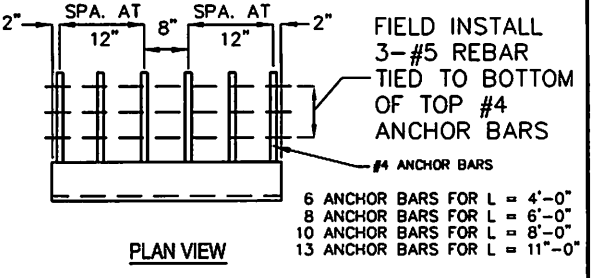

PLAN VIEW

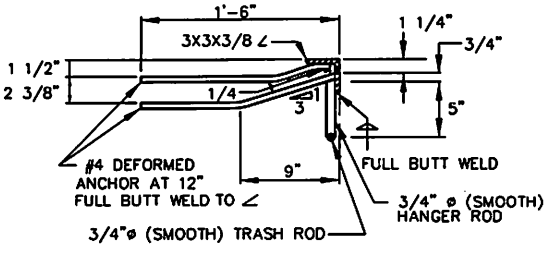

SECTION

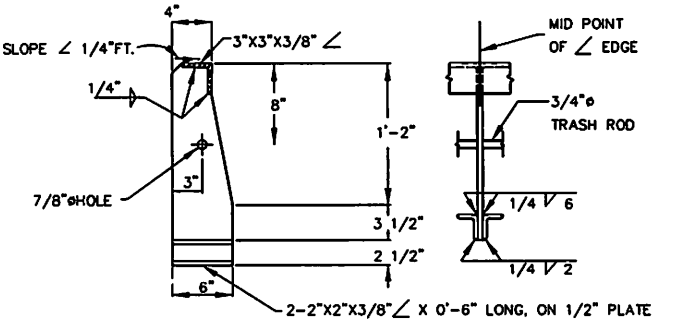

CENTER SUPPORT DETAIL

EDGE ANGLE ASSEMBLY

EDGE ANGLE ASSEMBLY NOTES

1. Edge angle assembly shall be structural steel. Exposed steel surfaces shall be finished smooth and hot dip galvanized after fabrication.
2. Nails or bolts used to anchor angle to form shall be removed or cut off flush with surface of angle.
3. Where center support is required (L = 8' - 0" and 11' - 0") shim under center support plate as needed and spade concrete solid under base angles.

41.01.DWG

NO:	DATE:	REVISION AND DESCRIPTION

INLETS NOTES
TYPE "A" & "C"
ANGLE EDGE ASSEMBLY

STANDARD DETAILS

CHECKED BY: DRAWN BY: DATE:

City of Jefferson
DEPARTMENT OF PUBLIC WORKS
ENGINEERING DIVISION

SHEET NUMBER
1 OF 2
SECTION
41.01

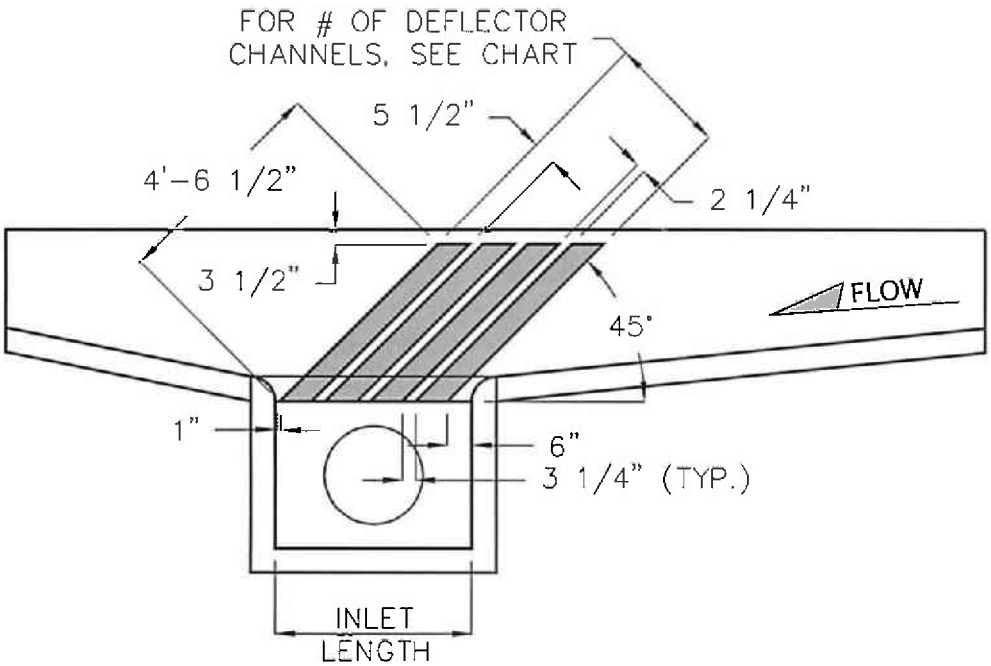

DEFLECTOR LAYOUT FOR TYPE "A" INLETS

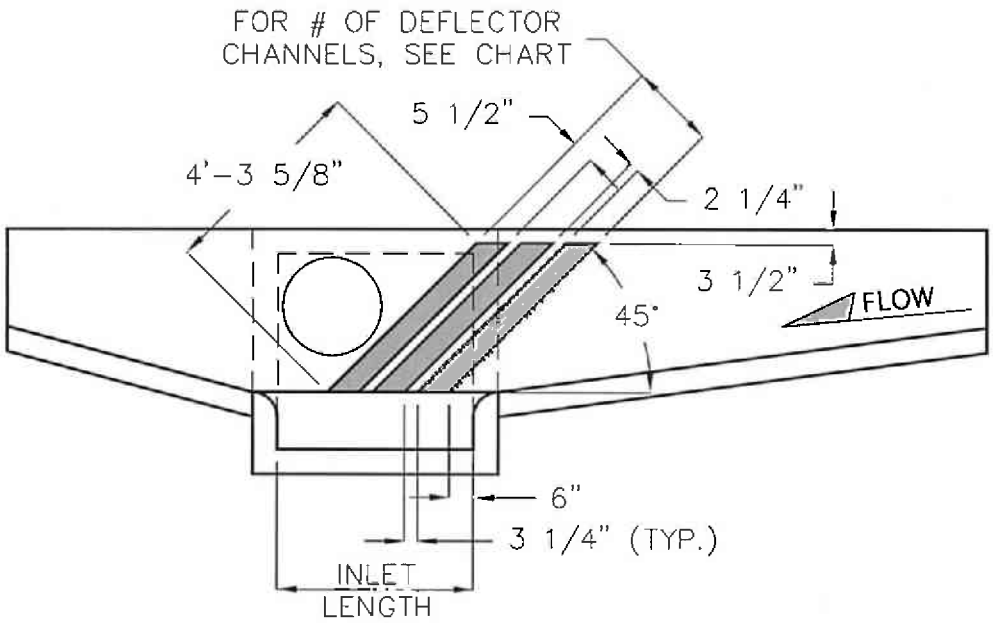

DEFLECTOR LAYOUT FOR TYPE "C" INLETS

	# OF DEFLECTOR CHANNELS	
INLET LENGTH	TYPE "A" INLET	TYPE "C" INLET
4'	4	3
6'	6	5
8'	8	7

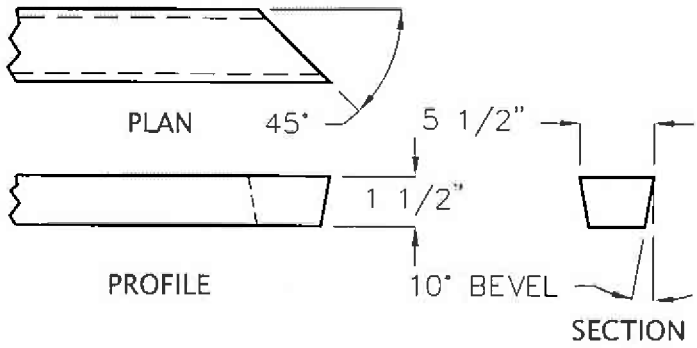

DEFLECTOR CHANNEL DETAILS

41.02.DWG

NO:	DATE:	REVISION AND DESCRIPTION

DEFLECTOR DETAILS FOR TYPE "A" & "C" INLETS

STANDARD DETAILS

CHECKED BY: DRAWN BY: DATE:

City of Jefferson
DEPARTMENT OF PUBLIC WORKS
ENGINEERING DIVISION

SHEET NUMBER
2 OF 2
SECTION
41.02

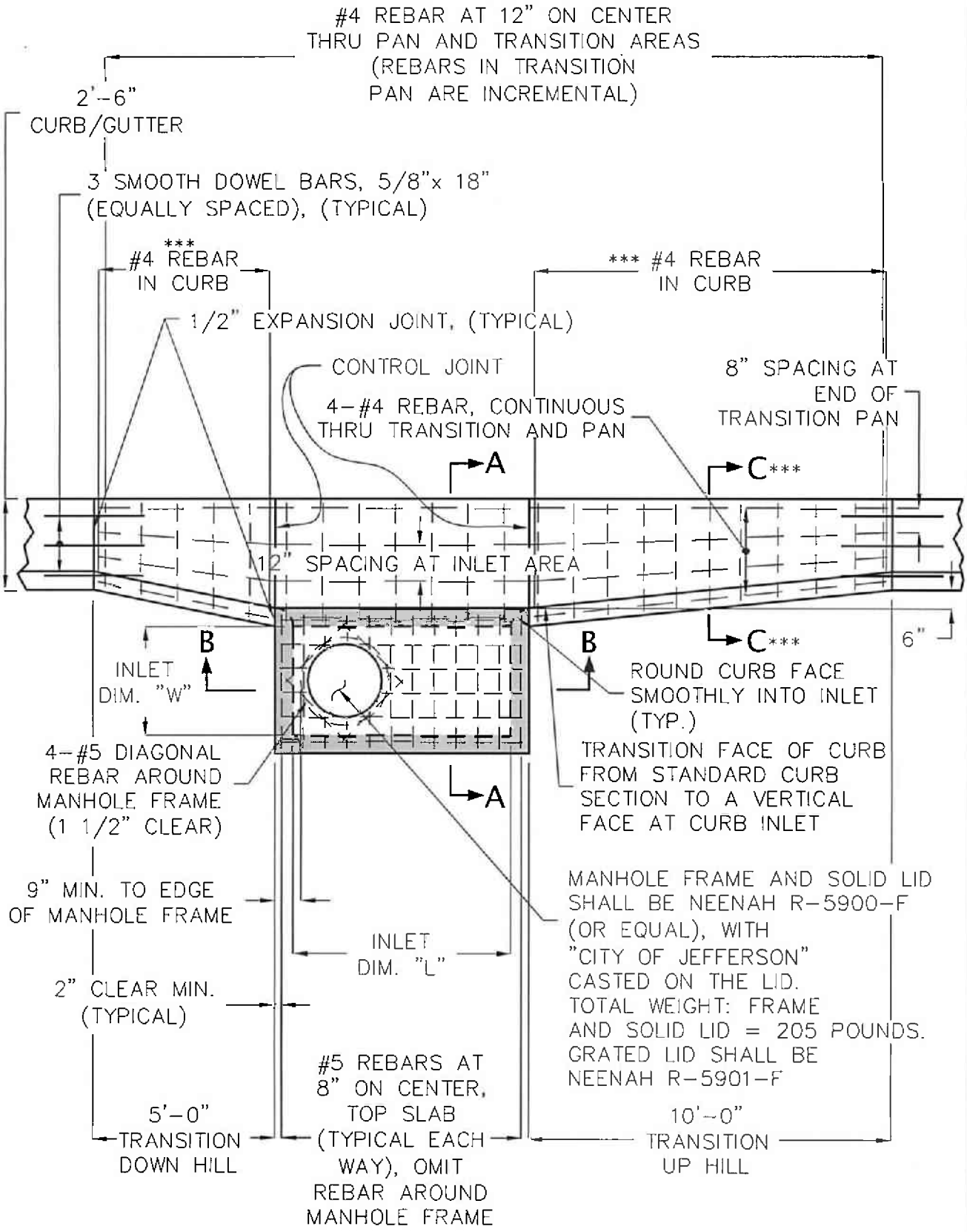

PLAN VIEW AND REINFORCEMENT FOR TYPE "A" INLET, AND TRANSITION PANS

NO:	DATE:	REVISION AND DESCRIPTION
1	8/2007	REVISE DRAWINGS FOR CLARITY
2	1/2010	*** ADDED #4 REBAR IN CURB

TYPE "A" INLET DETAILS

STANDARD DETAILS

CHECKED BY:

DRAWN BY:

DATE:

City of Jefferson
DEPARTMENT OF PUBLIC WORKS
ENGINEERING DIVISION

SHEET NUMBER
1 OF 3
SECTION
42.01

42.01.DWG

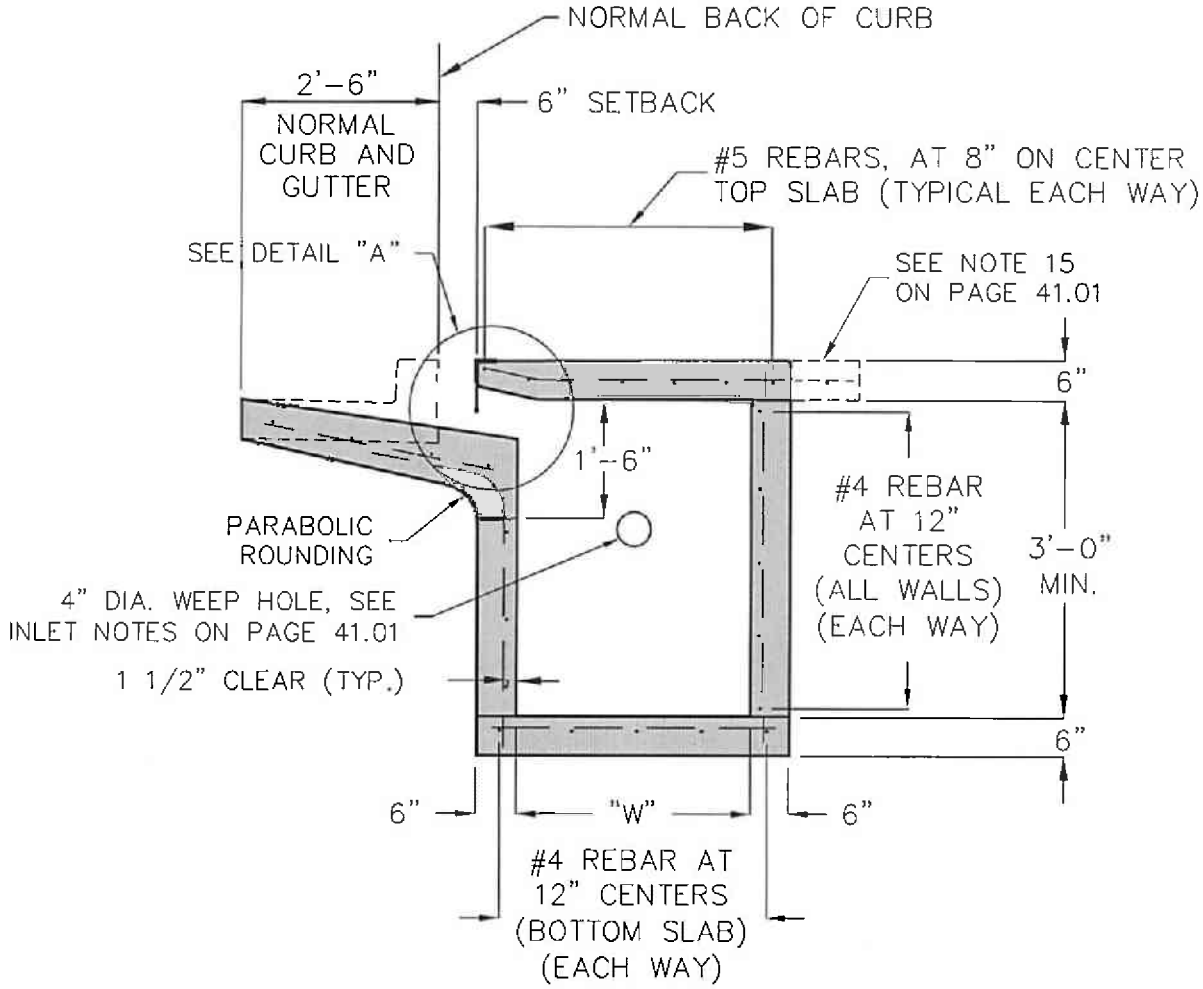

SECTION A-A

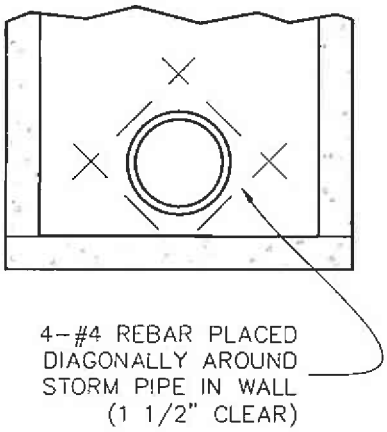

REINFORCEMENT AROUND PIPE THRU STRUCTURE WALL

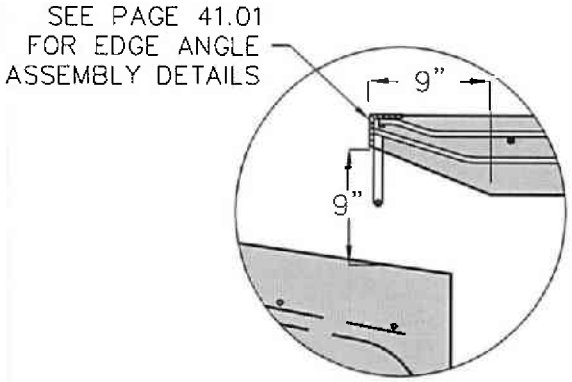

DETAIL "A"

NOTES
1. Inlet and exit pipes not shown.
2. Minimum fall through inlet = 0.20'

NO:	DATE:	REVISION AND DESCRIPTION
1	8/2007	REVISED DRAWING FOR CLARITY

TYPE "A" INLET DETAILS

STANDARD DETAILS

CHECKED BY:
DRAWN BY:
DATE:

City of Jefferson
DEPARTMENT OF PUBLIC WORKS
ENGINEERING DIVISION

SHEET NUMBER
2 OF 3
SECTION
42.02

42.02.DWG

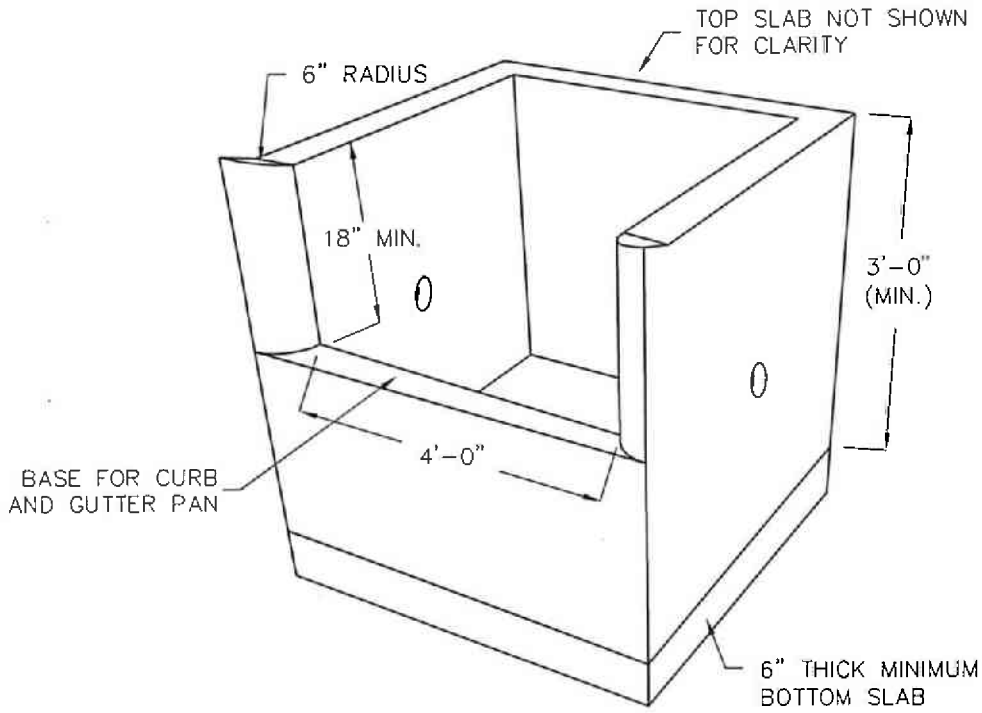

ISOMETRIC VIEW

SHOWN WITHOUT PAN AND TOP SLAB

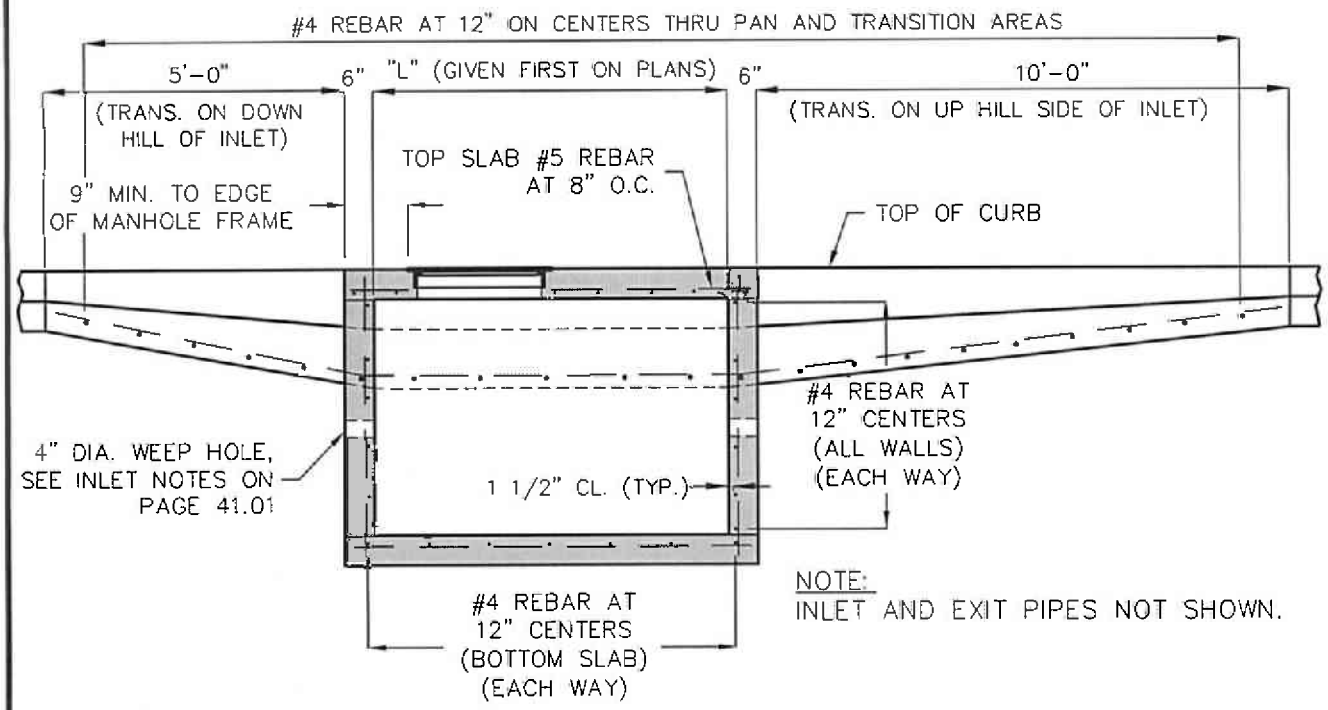

NOTE:
INLET AND EXIT PIPES NOT SHOWN.

SECTION B-B

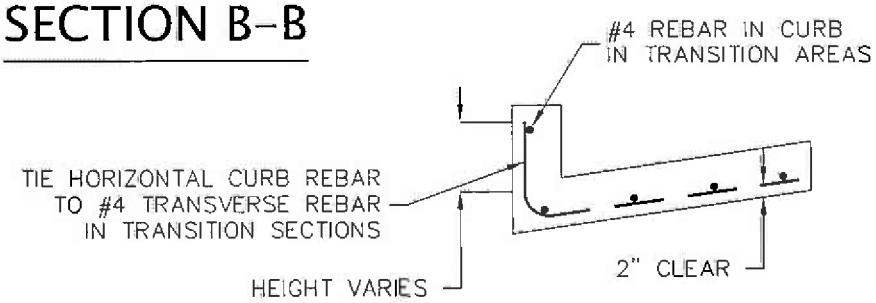

*** SECTION C-C

NO:	DATE:	REVISION AND DESCRIPTION
1	8/2007	REVISE DRAWINGS FOR CLARITY
2	1/2010	*** ADDED #4 REBAR IN CURB

TYPE "A" INLET SECTION B-B

STANDARD DETAILS

CHECKED BY | DRAWN BY | DATE

City of Jefferson
DEPARTMENT OF PUBLIC WORKS
ENGINEERING DIVISION

SHEET NUMBER
3 OF 3
SECTION
42.03

42.03.DWG

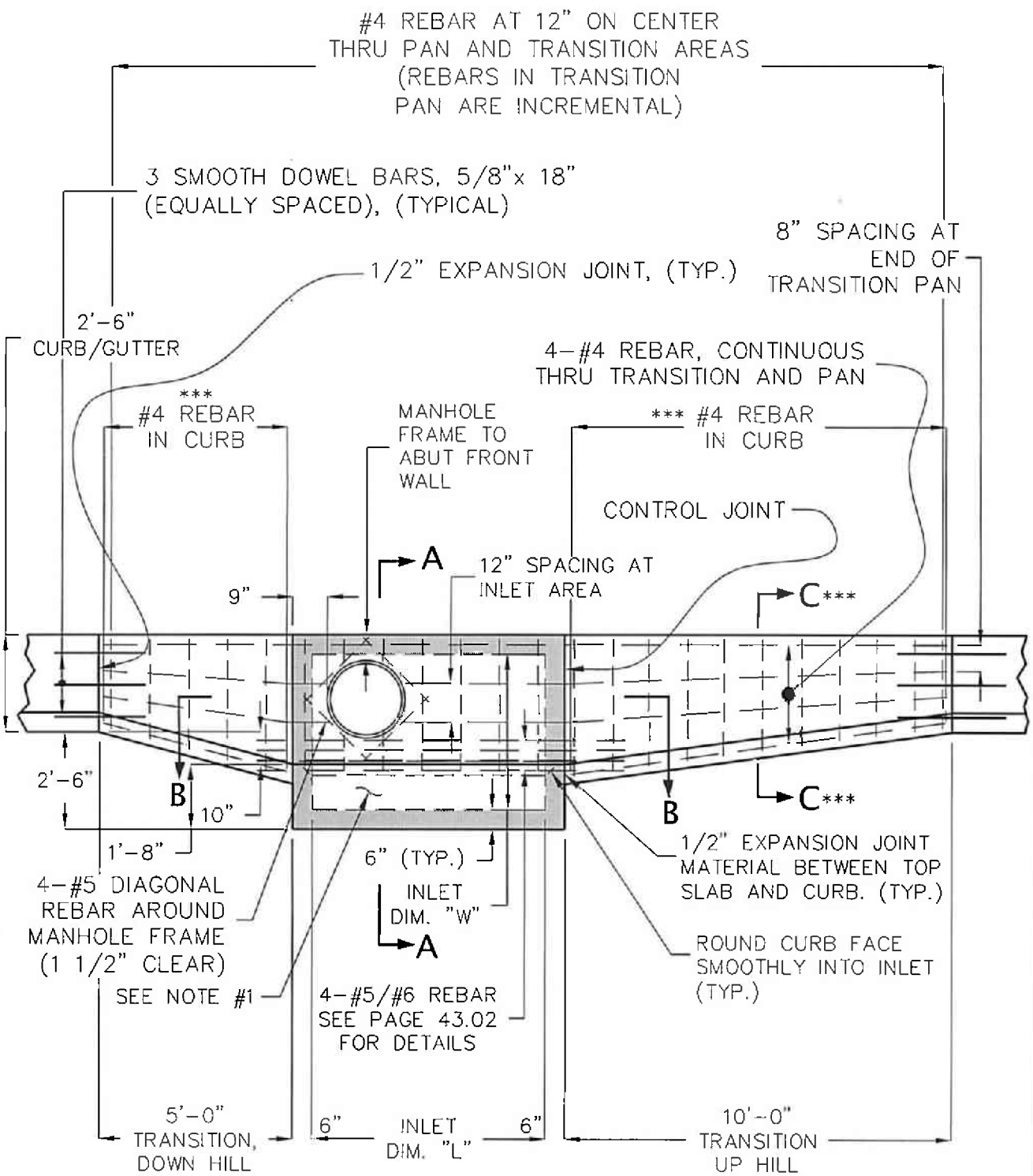

PLAN VIEW AND REINFORCEMENT FOR TYPE "C" INLET TRANSITION PANS

NOTES:

1. FOR TOP SLAB REINFORCEMENT, SEE EDGE ANGLE ASSEMBLY DETAILS.

NO:	DATE:	REVISION AND DESCRIPTION
1	8/2007	REVISE DRAWING FOR CLARITY
2	1/2010	*** MODIFIED REBAR IN PAN

TYPE "C" INLET DETAILS

STANDARD DETAILS

CHECKED BY | DRAWN BY: | DATE

City of Jefferson
DEPARTMENT OF PUBLIC WORKS
ENGINEERING DIVISION

SHEET NUMBER
1 OF 4
SECTION
43.01

43.01.DWG

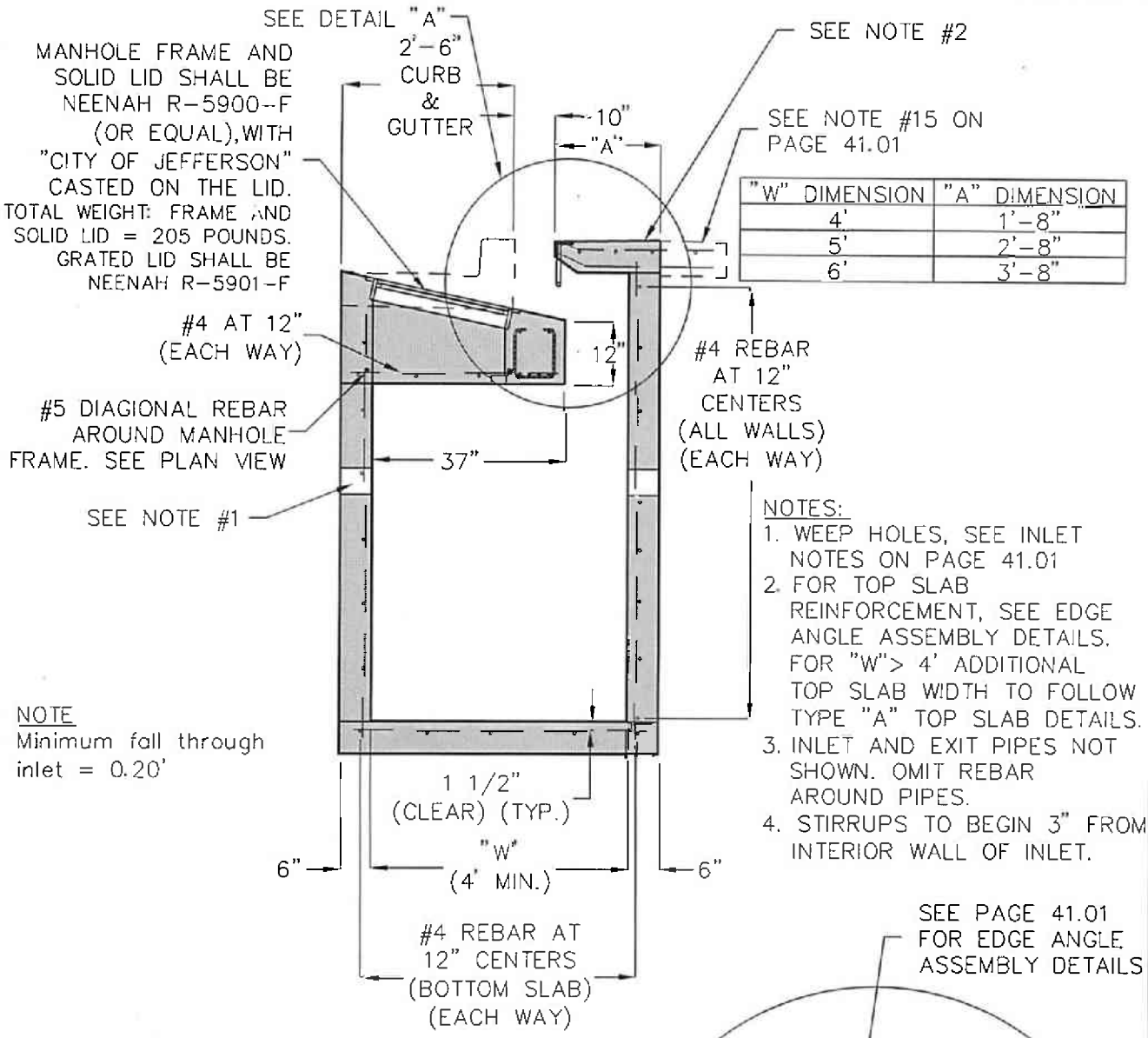

"W" DIMENSION	"A" DIMENSION
4'	1'-8"
5'	2'-8"
6'	3'-8"

NOTES:
1. WEEP HOLES, SEE INLET NOTES ON PAGE 41.01
2. FOR TOP SLAB REINFORCEMENT, SEE EDGE ANGLE ASSEMBLY DETAILS. FOR "W"> 4' ADDITIONAL TOP SLAB WIDTH TO FOLLOW TYPE "A" TOP SLAB DETAILS.
3. INLET AND EXIT PIPES NOT SHOWN. OMIT REBAR AROUND PIPES.
4. STIRRUPS TO BEGIN 3" FROM INTERIOR WALL OF INLET.

NOTE
Minimum fall through inlet = 0.20'

SECTION A-A

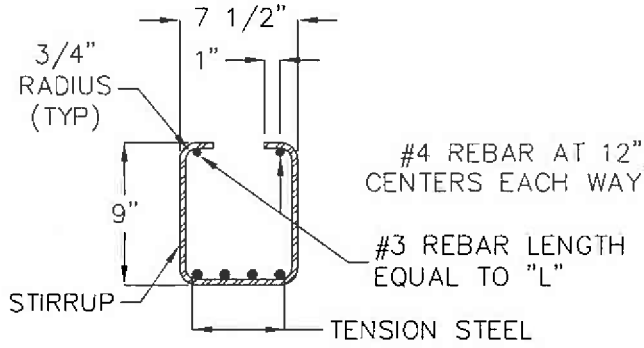

*** STIRRUP DETAIL

INLET LENGTH	TENSION STEEL BAR SIZE	TENSION STEEL LENGTH	NUMBER OF #3 STIRRUPS	STIRRUP SPACING
4'	#5	96"	8	6"
6'	#5	120"	12	6"
8'	#6	153"	16	6"

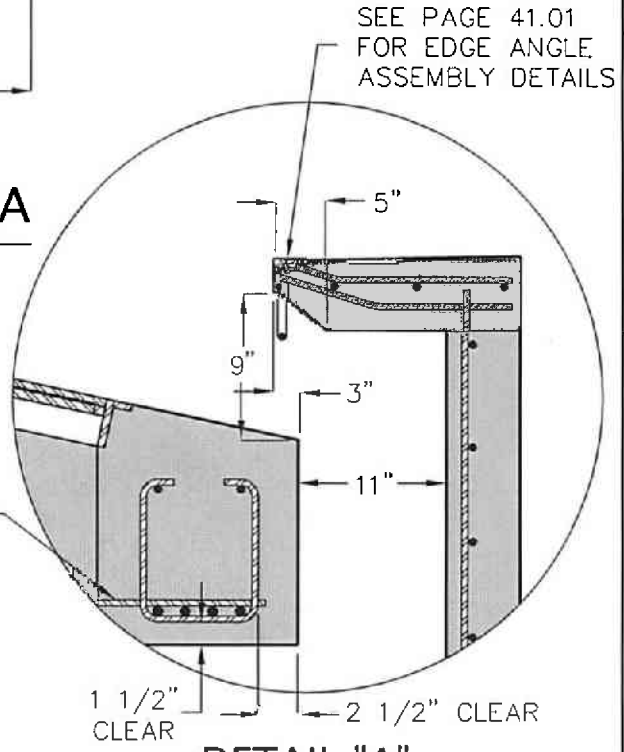

DETAIL "A"

NO:	DATE:	REVISION AND DESCRIPTION
1	1/2010	ADDED STIRRUP/REINFORCEMENT IN PAN

TYPE "C" INLET DETAILS

STANDARD DETAILS

CHECKED BY: DRAWN BY: DATE:

City of Jefferson
DEPARTMENT OF PUBLIC WORKS
ENGINEERING DIVISION

SHEET NUMBER
2 OF 4
SECTION
43.02

43.02.DWG

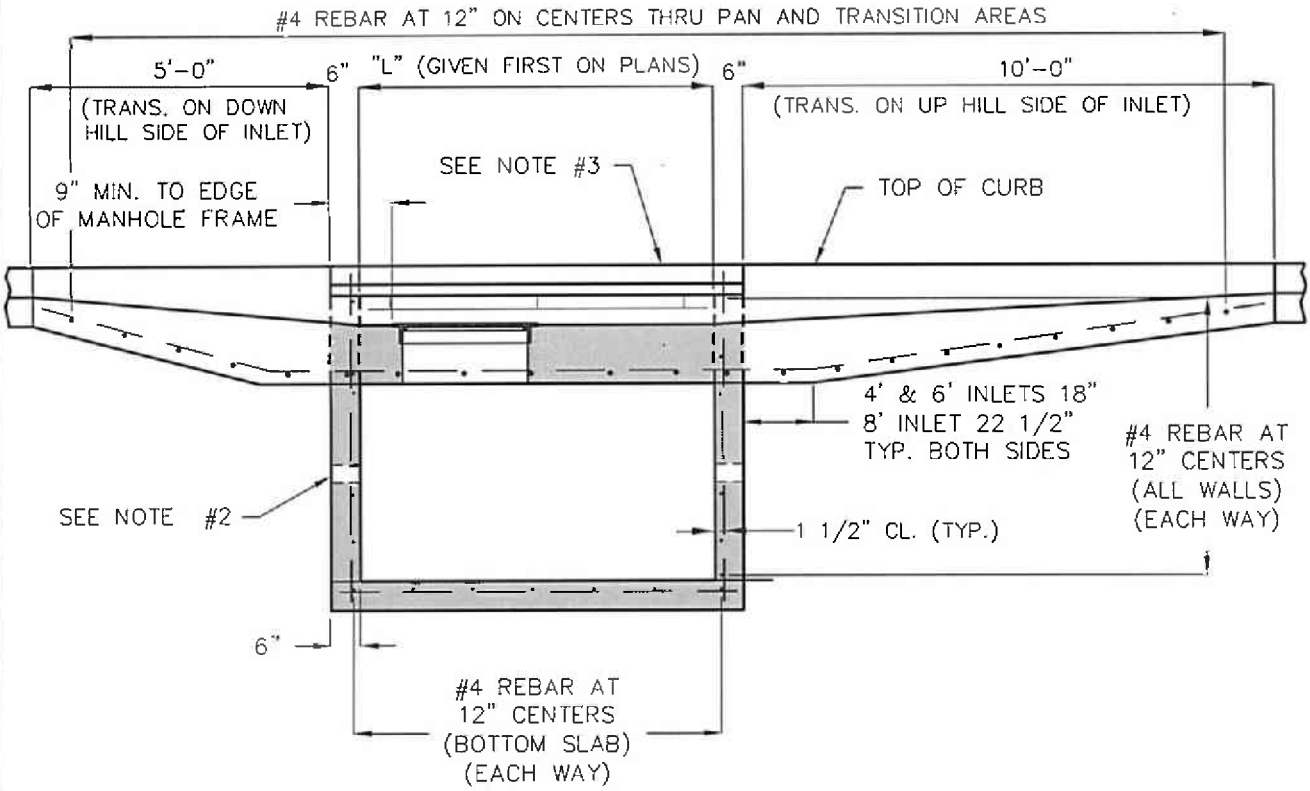

SECTION B-B

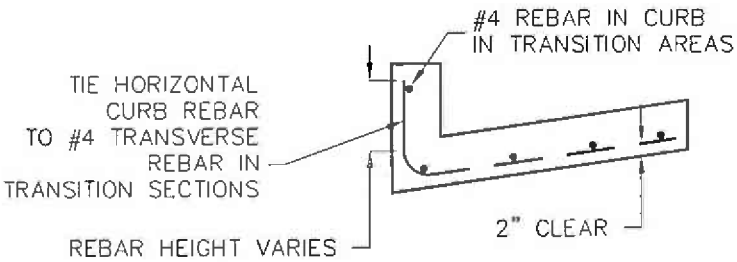

*** SECTION C-C

NOTES:

1. TENSION STEEL SHALL EXTEND OUTSIDE OF INLET WALL.
   A. 4 FT AND 6 FT. INLETS; REBAR SHALL EXTEND 18" INTO TRANSITION FROM THE OUTSIDE INLET WALL.
   B. 8 FT. INLETS; REBAR SHALL EXTEND 22 1/2" INTO TRANSITION FROM THE OUTSIDE INLET WALL.
2. WEEP HOLES, SEE INLET NOTES ON PAGE 41.01.
3. FOR TOP SLAB REINFORCEMENT, SEE EDGE ANGLE ASSEMBLY DETAILS.
4. INLET AND EXIT PIPES NOT SHOWN. OMIT REBAR AROUND PIPES.

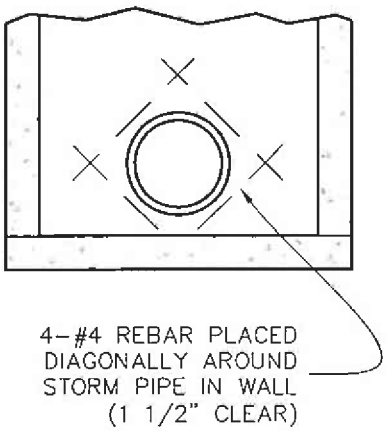

REINFORCEMENT AROUND PIPE THRU STRUCTURE WALL

NO:	DATE:	REVISION AND DESCRIPTION
1	8/2007	REVISE DRAWINGS FOR CLARITY
2	1/2010	*** ADDED #4 REBAR IN CURB

TYPE "C" INLET SECTION B-B

STANDARD DETAILS

CHECKED BY: DRAWN BY: DATE:

City of Jefferson
DEPARTMENT OF PUBLIC WORKS
ENGINEERING DIVISION

SHEET NUMBER
3 OF 4
SECTION
43.03

43.03.DWG

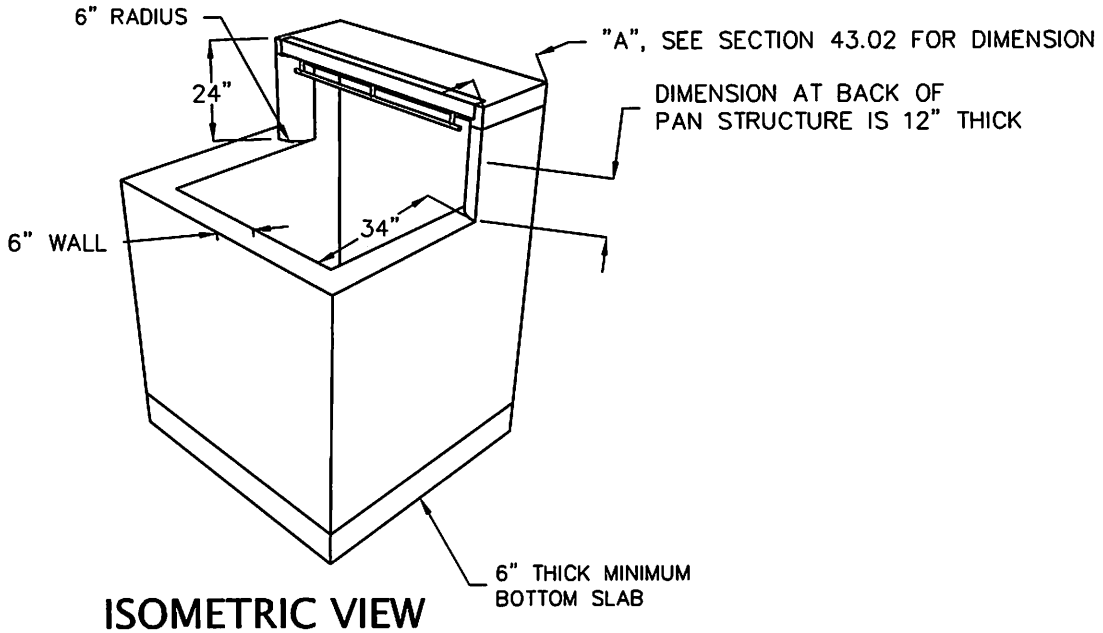

ISOMETRIC VIEW

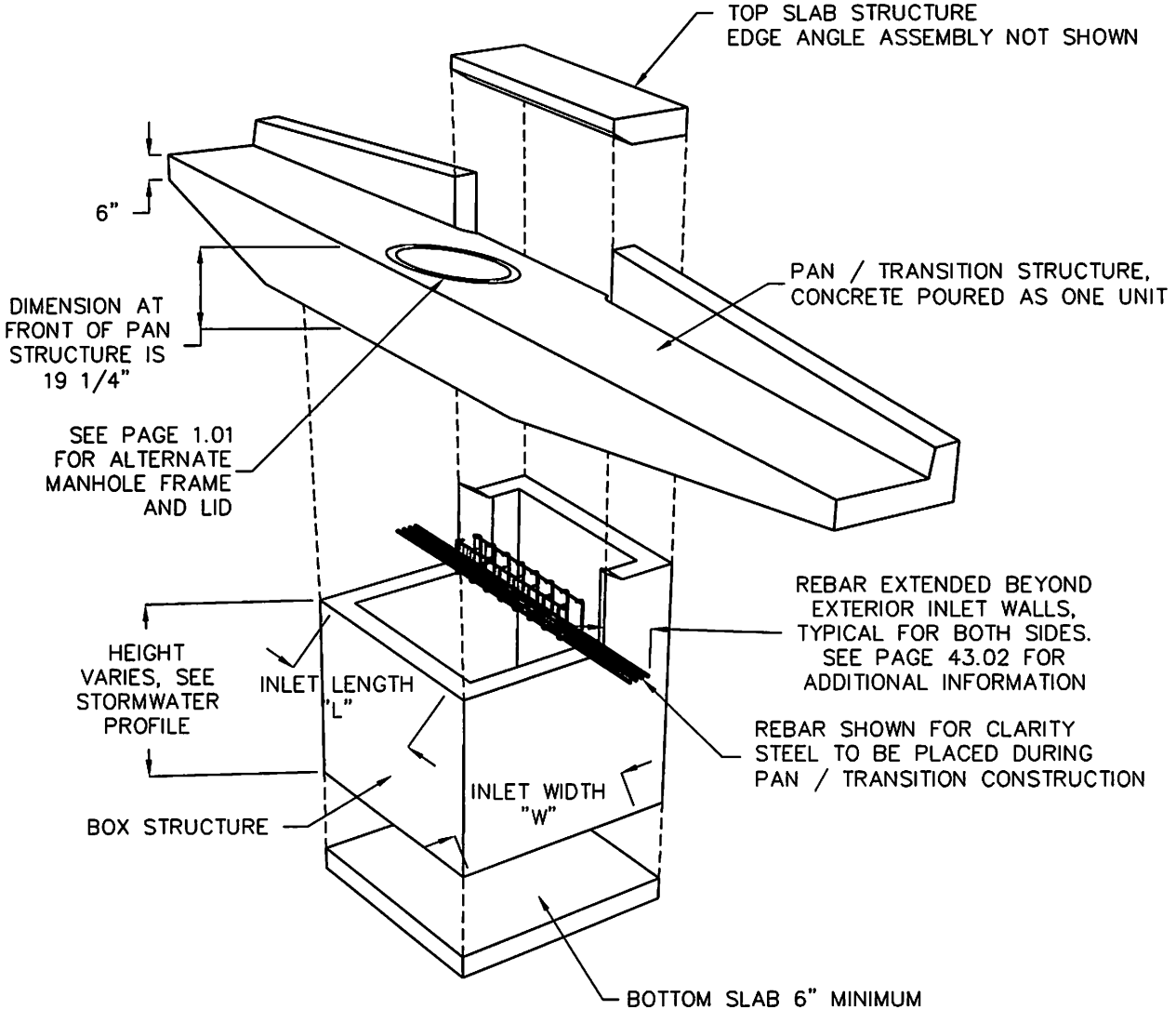

ISOMETRIC VIEW SHOWING SEPERATE CONCRETE POURS

43.03.DWG

NO:	DATE:	REVISION AND DESCRIPTION

TYPE "C" INLET ISOMETRIC VIEWS

STANDARD DETAILS

CHECKED BY:

DRAWN BY:

DATE: 1/2010

City of Jefferson
DEPARTMENT OF PUBLIC WORKS
ENGINEERING DIVISION

SHEET NUMBER
4 OF 4
SECTION
43.04

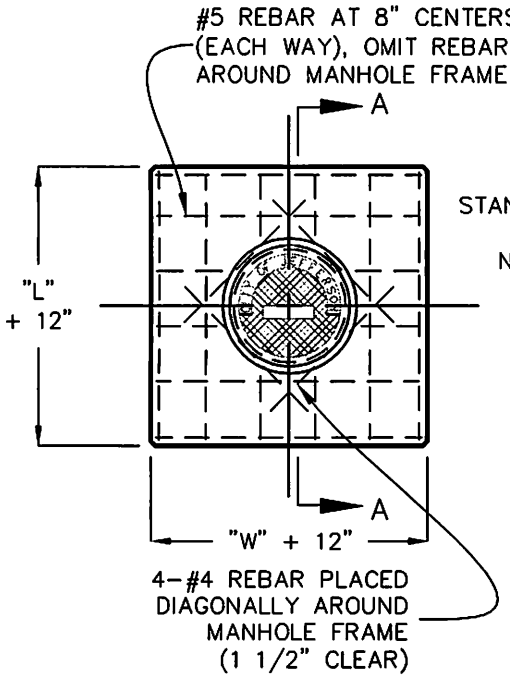

TOP SLAB

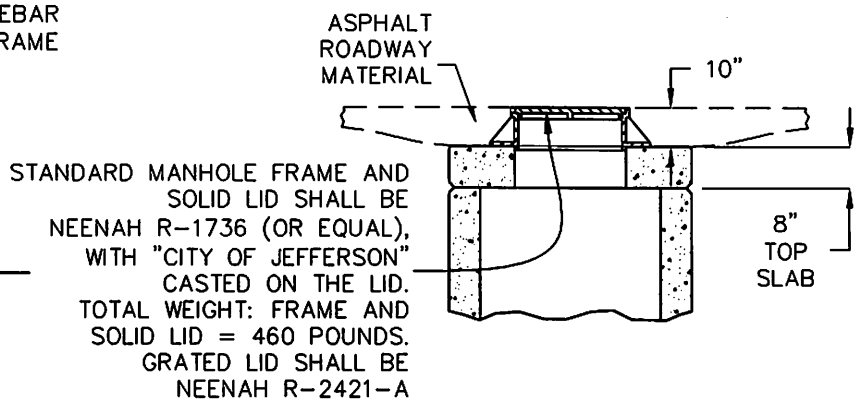

SECTION OF JUNCTION BOX IN ASPHALT ROADWAY LAYOUT

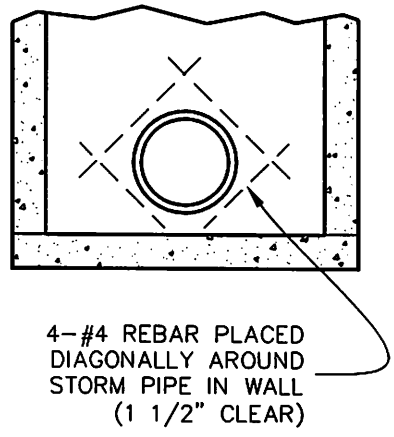

REINFORCEMENT AROUND PIPE THRU STRUCTURE WALL

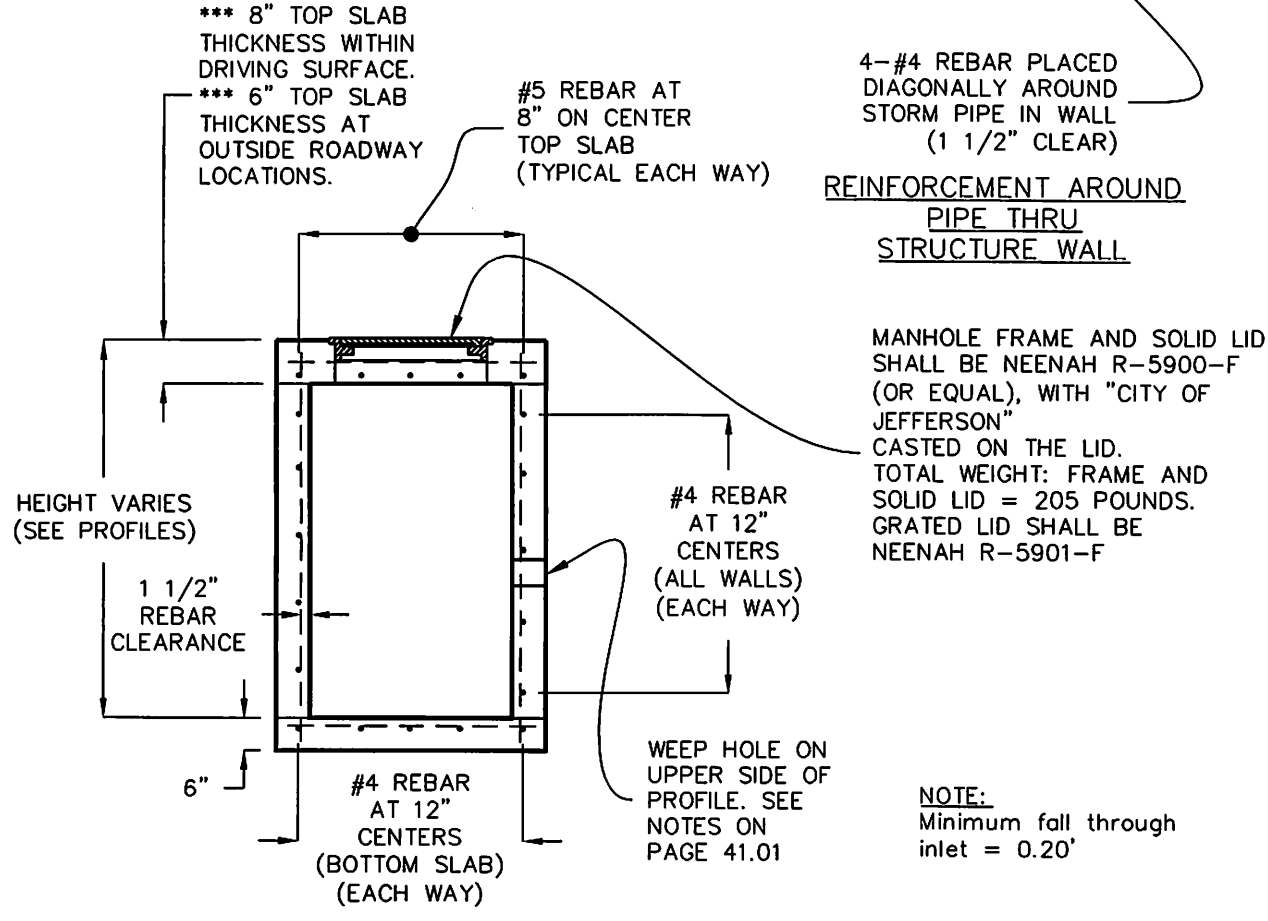

SECTION A-A

NOTE:
Minimum fall through inlet = 0.20'

NO:	DATE:	REVISION AND DESCRIPTION
1	1/2010	*** ADDED TOP SLAB THICKNESS REQUIREMENT

JUNCTION BOX DETAILS

STANDARD DETAILS

CHECKED BY:
DRAWN BY:
DATE:

City of Jefferson
DEPARTMENT OF PUBLIC WORKS
ENGINEERING DIVISION

SHEET NUMBER
1 OF 3
SECTION
44.01

44.01.DWG

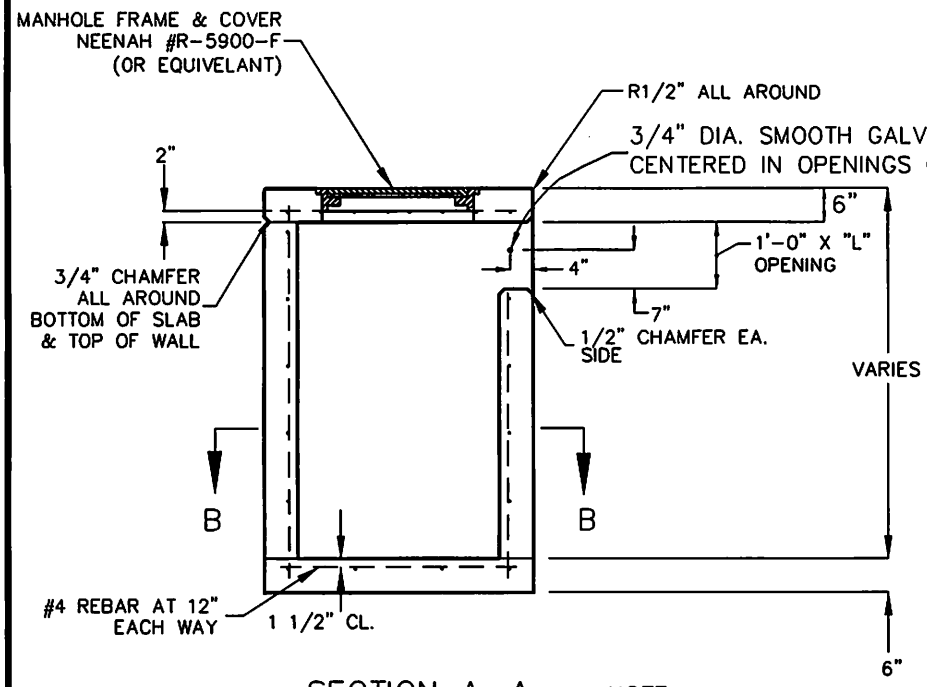

SECTION A–A

NOTES:

1. AREA INLET MAY HAVE UP TO 4 SIDE OPENINGS; AS DIRECTED BY ENGINEER OR AS SHOWN ON PLANS.
2. ON ALL NON OPEN SIDES, THE VERTICAL STEEL FROM THE WALLS SHALL EXTEND INTO THE LID.

NOTE:
Minimum fall through inlet = 0.20'

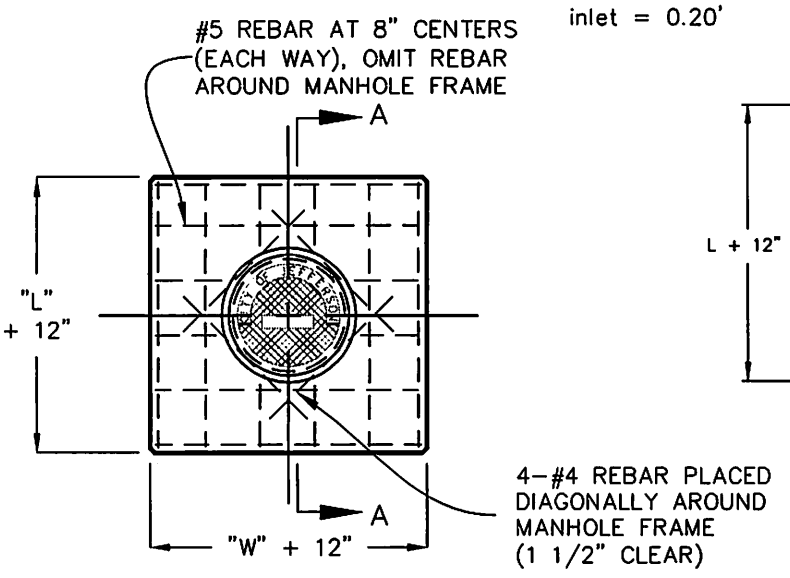

TOP SLAB

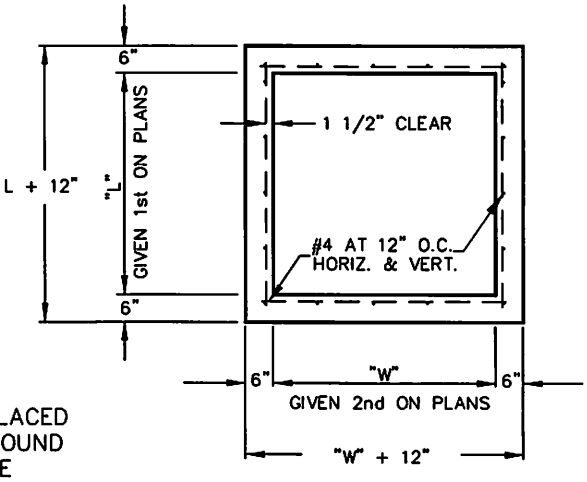

SECTION B–B

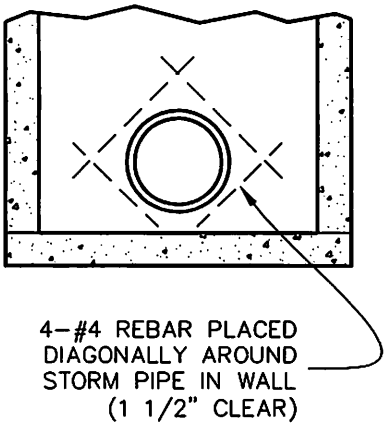

REINFORCEMENT AROUND PIPE THRU STRUCTURE WALL

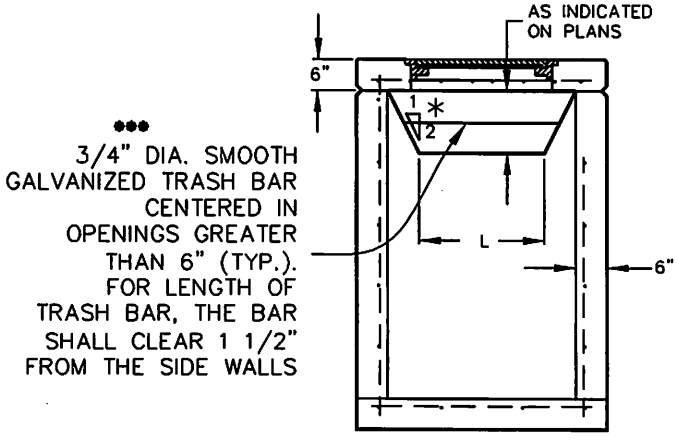

* NOTE: DO NOT USE 1:2 SLOPE ON 4'–0" INLET, USE STRAIGHT SIDES.

SECTION SHOWING OPENING

NO:	DATE:	REVISION AND DESCRIPTION
1	1/2006	Added Junction Box Roadway layout
2	1/2010	*** ADDED TRASH BAR REQUIREMENTS

AREA INLET DETAILS

STANDARD DETAILS

CHECKED BY:
DRAWN BY:
DATE:

City of Jefferson
DEPARTMENT OF PUBLIC WORKS
ENGINEERING DIVISION

SHEET NUMBER
2 OF 3
SECTION
44.02

44.01.DWG

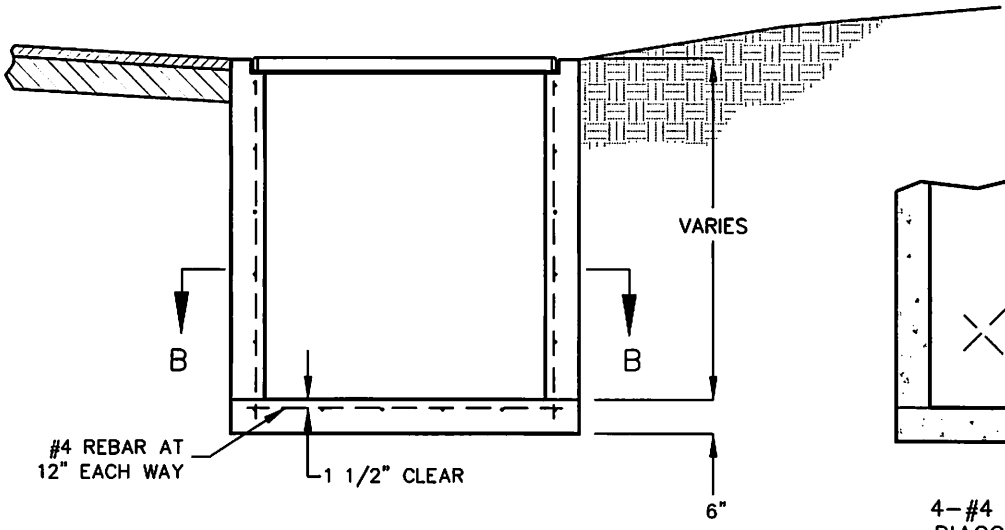

SECTION VIEW

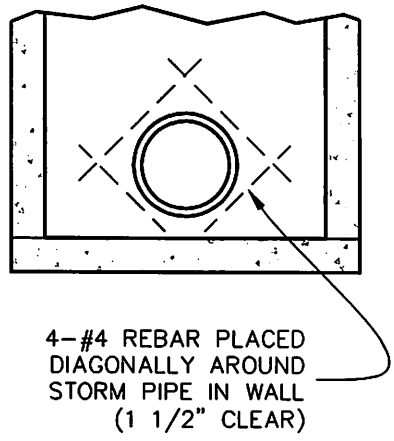

REINFORCEMENT AROUND PIPE THRU STRUCTURE WALL

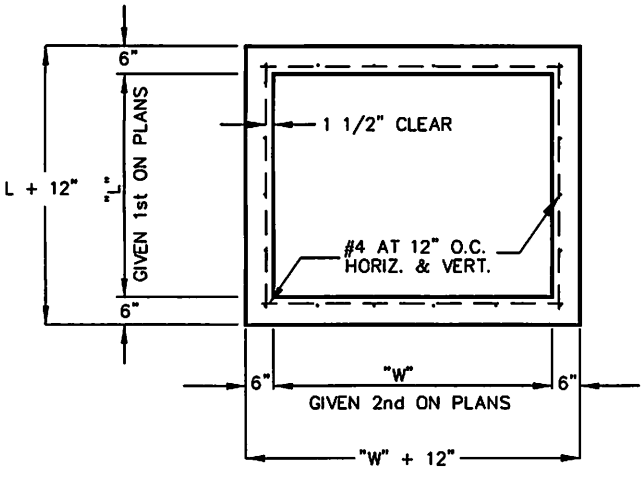

SECTION B-B

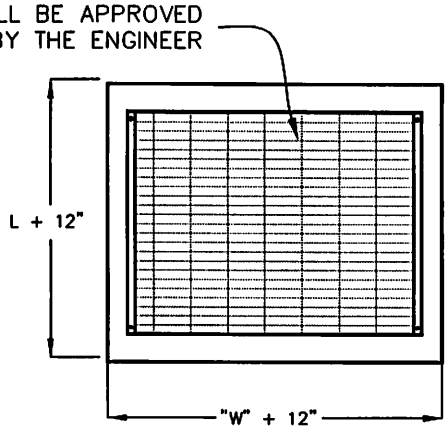

TOP VIEW

NOTE:
Minimum fall through inlet = 0.20'

GRATE INLET GENERAL NOTES:

BEND REINFORCEMENT AROUND PIPE OPENINGS WHEREVER FEASIBLE. PROVIDE 4-#4 DIAGONALS AROUND PIPE OPENINGS.

CENTER PIPE AT INSIDE FACE OF WALL TO BE AT CENTER OF WALL UNLESS OTHERWISE SPECIFIED TRIM PIPE FLUSH WITH INSIDE FACE OF WALLS.

NO:	DATE:	REVISION AND DESCRIPTION

GRATE INLET DETAILS

STANDARD DETAILS

CHECKED BY:

DRAWN BY:

DATE:

City of Jefferson
DEPARTMENT OF PUBLIC WORKS
ENGINEERING DIVISION

SHEET NUMBER
3 OF 3
SECTION
44.03

44.03.DWG

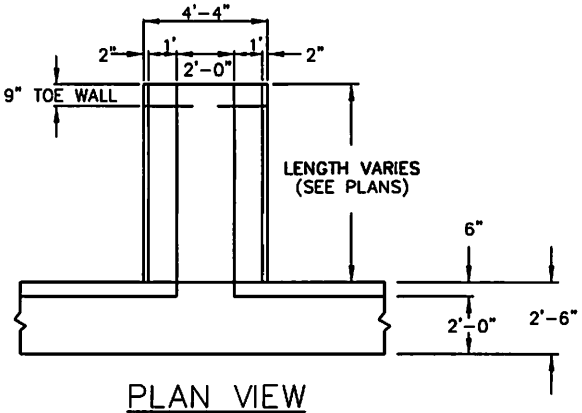

PLAN VIEW

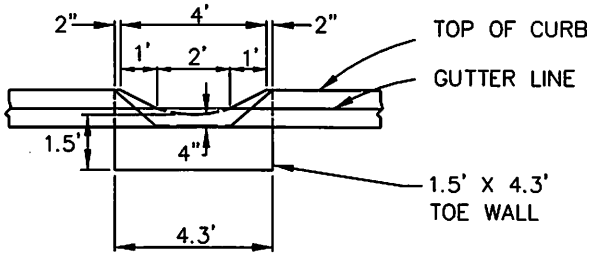

FRONT VIEW

WHEN ON SLOPE, FLUME NEEDS TO BE ANGLED.

DEFLECTORS ARE REQUIRED WHEN SLOPE OF GUTTER IS 5% OR GREATER.

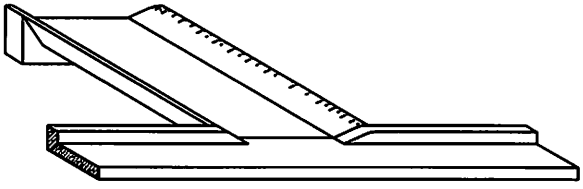

ISOMETRIC VIEW

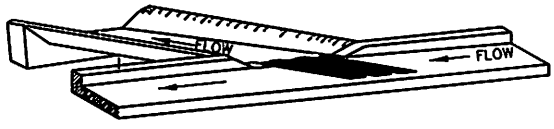

CONCRETE FLUME

NO:	DATE:	REVISION AND DESCRIPTION

CONCRETE FLUME DETAILS

STANDARD DETAILS

CHECKED BY:

DRAWN BY:

DATE:

City of Jefferson
DEPARTMENT OF PUBLIC WORKS
ENGINEERING DIVISION

SHEET NUMBER
1 OF 1
SECTION
45.01

45.01.DWG

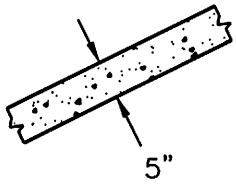

GENERAL NOTES:
THE TOE WALL SHALL BE CONSTRUCTED AT OUTLET END OF DITCH LINER & AT 50-FOOT MAXIMUM SPACING. "SAW" JOINTS SHALL BE AT 10' INTERVALS, AND SEALED AS PER CITY STREET STANDARDS.

SECTION THRU CONCRETE LINER OR TOE WALL

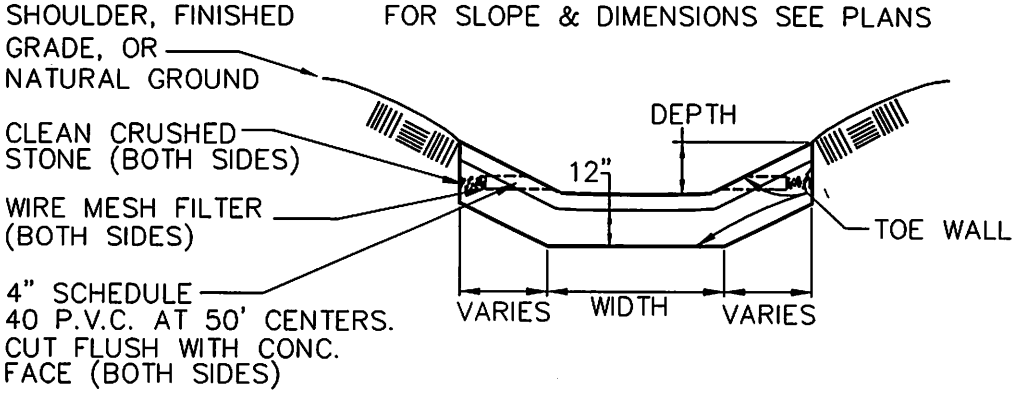

TYPICAL FLAT-BOTTOM DITCH LINER

NO:	DATE:	REVISION AND DESCRIPTION

CONCRETE CHANNELS

STANDARD DETAILS

CHECKED BY:

DRAWN BY:

DATE:

City of Jefferson
DEPARTMENT OF PUBLIC WORKS
ENGINEERING DIVISION

SHEET NUMBER
1 OF 1
SECTION
46.01

46.01.DWG

CONSTRUCT LINING ON BACKSLOPE AT CULVERT OUTLET WHEN ROADWAY DITCH IS INTERCEPTED AND FLOW IS CARRIED IN ROADWAY DITCH FOR SOME DISTANCE (SEE PLAN SHEET FOR DISTANCE)

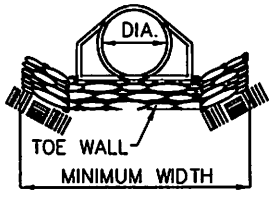

END VIEW
DISCHARGE INTO END OF CHANNEL

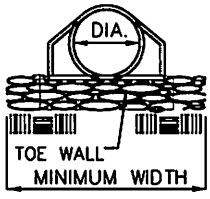

END VIEW
DISCHARGE INTO SIDE OF CHANNEL

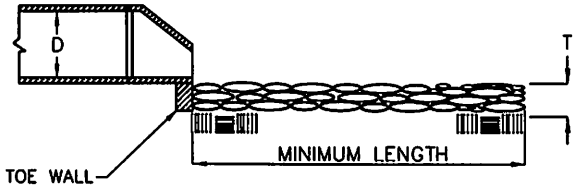

SIDE VIEW
DISCHARGE INTO SIDE OF CHANNEL

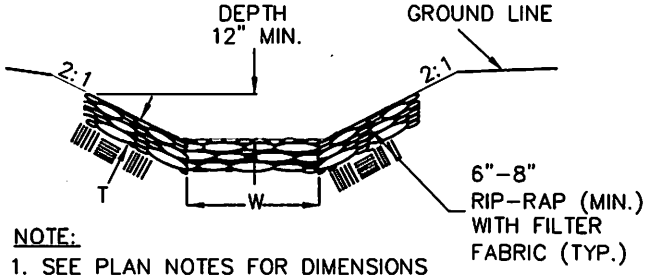

NOTE:
1. SEE PLAN NOTES FOR DIMENSIONS
2. L=LENGTH ALONG CHANNEL
3. NO DIRECT PAYMENT FOR EXCAVATION NECESSARY TO PLACE RIP-RAP

CHANNEL CROSS SECTION

GENERAL NOTES
A MINUS TOLERANCE OF 3" IN WIDTH AND 1/2" IN THICKNESS WILL BE PERMITTED. PLUS TOLERANCES ARE NOT LIMITED.

ROCK LINING FOR CULVERT OUTLETS

ROCK FILL CHANNEL LINING FOR CONTROL OF VELOCITIES TO 20 FEET PER SECOND

CULVERT SIZE, DIA./INCH	MINIMUM DEPTH AND WIDTH/FEET	MINIMUM LENGTH FEET	MINIMUM THICKNESS OF ROCK, FEET
18	1 X 4	12	1.0
24	1 X 6	14	1.0
30	1 X 7	16	1.0
36	1.5 X 9	18	1.0
42	2 X 10	20	1.5
48	2 X 12	20	1.5
54	2 X 13.5	22	1.5
60	2 X 15	25	1.5
66	2 X 18	25	2.0
72	2 X 20	30	2.0
84	2.5 X 25	35	2.5
96	2.5 X 30	40	2.5
108	3 X 32	40	2.5

ROCK LINING FOR CULVERT OUTLETS

CULVERT SIZE, DIA./INCH	MINIMUM DEPTH AND WIDTH/FEET	MINIMUM LENGTH FEET	ROCK LINING CU.YD.	EQUIVALENT PIPE ARCH CULVERT (APPROX.)	EQUIVALENT CONC. BOX CULV. (APPROX.)
18	1 X 4	12	2		
24	1 X 6	14	3		2' X 1 1/2'
30	1 X 7	16	4	8-5	2' X 2'
36	1.5 X 9	18	9	8-6	3' X 2'
42	2 X 10	20	15	8-7	3' X 3'
48	2 X 12	20	18	8-8	4' X 3'
54	2 X 13.5	22	22	8-9	4' X 4'
60	2 X 15	25	28	8-10	5' X 4'
66	2 X 18	25	33	8-11	5' X 5'
72	2 X 20	30	44	8-12	5' X 6'
84	2.5 X 25	35	81		6' X 6'
96	2.5 X 30	40	111		7' X 7'
108	3 X 32	40	142		8' X 8'

NO:	DATE:	REVISION AND DESCRIPTION

IMPROVED CHANNELS

STANDARD DETAILS

CHECKED BY:
DRAWN BY:
DATE:

City of Jefferson
DEPARTMENT OF PUBLIC WORKS
ENGINEERING DIVISION

SHEET NUMBER
1 OF 1
SECTION
47.01

47.01.DWG

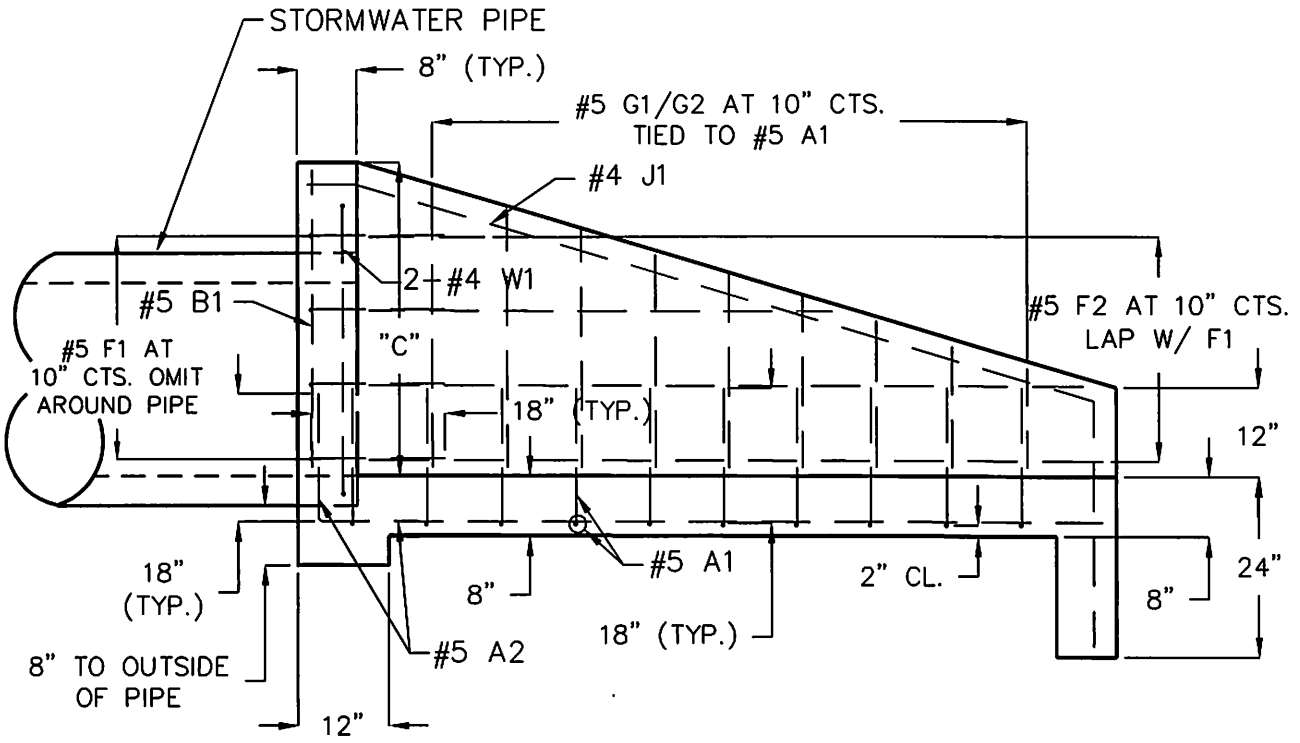

ELEVATION

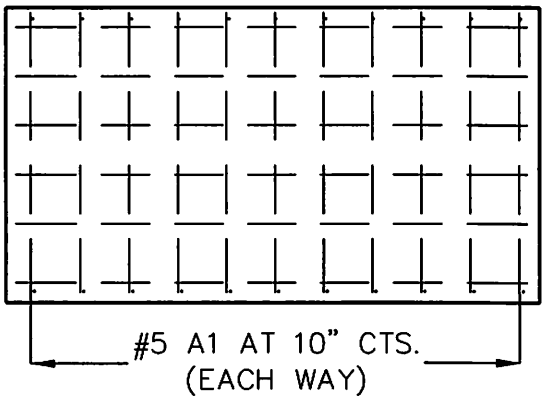

BOTTOM SLAB

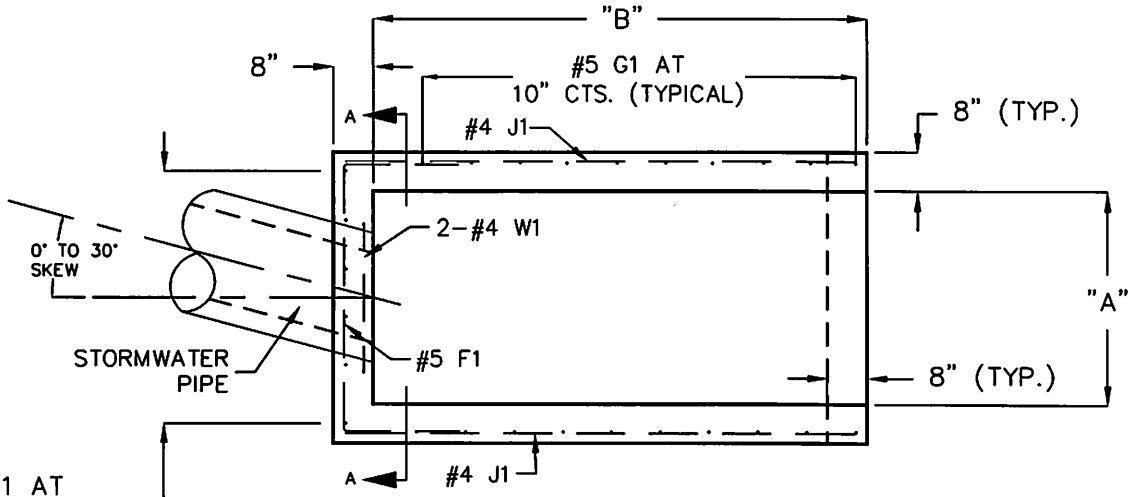

PLAN

NO:	DATE:	REVISION AND DESCRIPTION
1	8/2007	Lowered pipe to be flush with bottom slab

CONCRETE END SECTION DETAILS

STANDARD DETAILS

CHECKED BY:

DRAWN BY:

DATE:

City of Jefferson
DEPARTMENT OF PUBLIC WORKS
ENGINEERING DIVISION

SHEET NUMBER
1 OF 3
SECTION
48.01

F:\STANDARD\STANDARDS ON 8.5x11\48.01.DWG

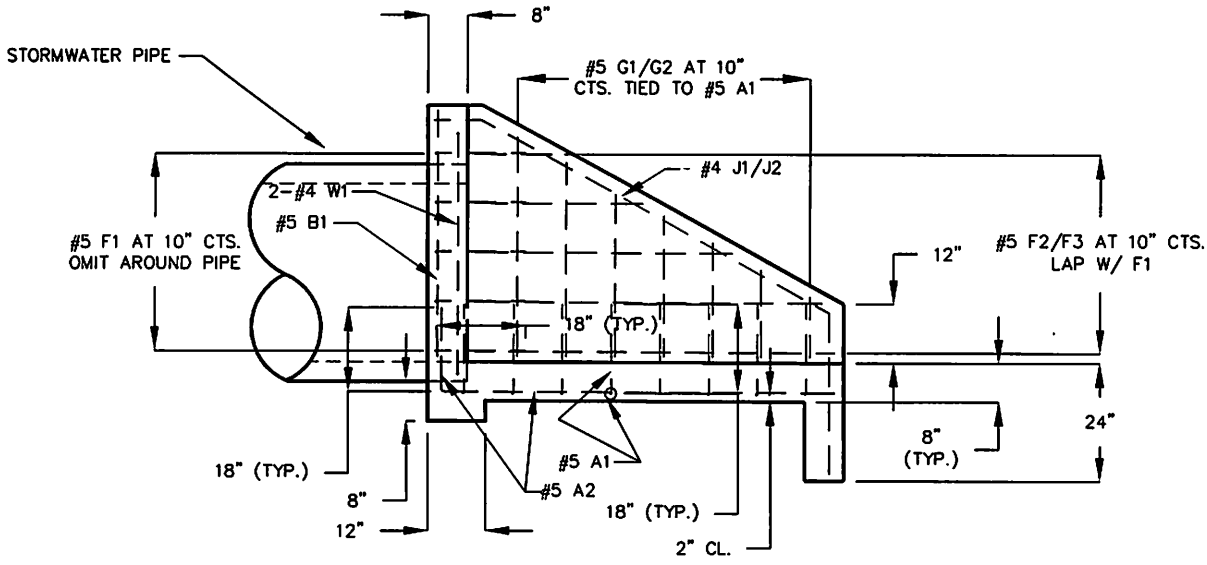

ELEVATION

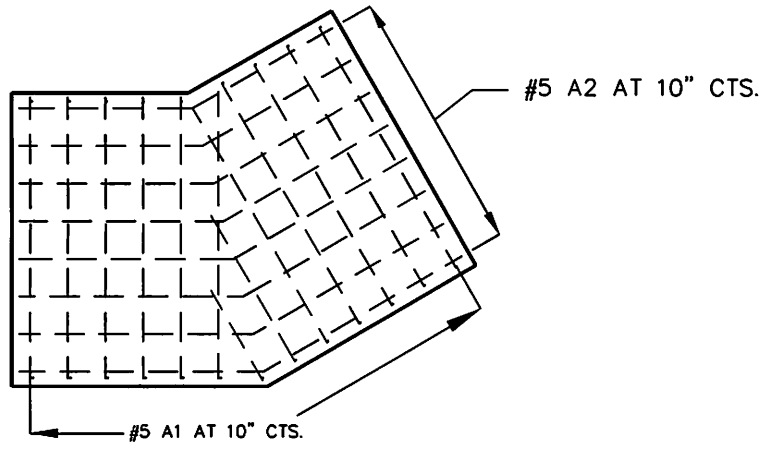

BOTTOM SLAB

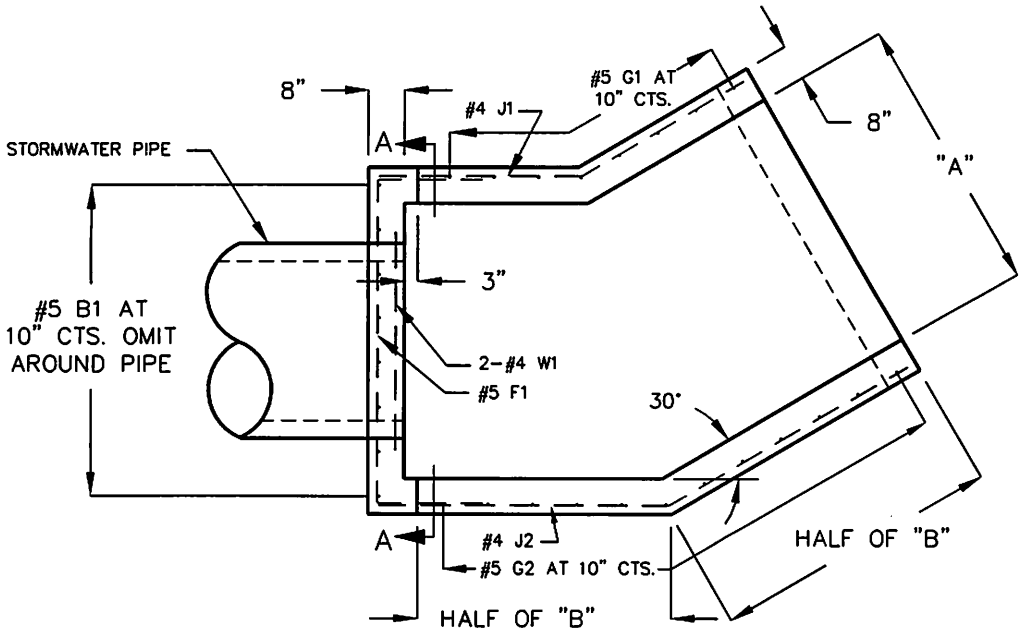

NO:	DATE:	REVISION AND DESCRIPTION
1	8/2007	Lowered pipe to be flush with bottom slab.

CONCRETE END SECTION DETAILS

STANDARD DETAILS

CHECKED BY:

DRAWN BY:

DATE:

City of Jefferson
DEPARTMENT OF PUBLIC WORKS
ENGINEERING DIVISION

SHEET NUMBER
2 OF 3
SECTION
48.02

48.02.DWG

GENERAL NOTES:

1. ALL REINFORCING STEEL TO BE ASTM A615, GRADE 60 UNLESS NOTED OTHERWISE NOTED.
2. ALL REINFORCING STEEL SHALL HAVE 2" COVER, UNLESS NOTED OTHERWISE.
3. ALL REINFORCING REBAR TO BE DETAILED AND PLACED IN ACCORDANCE WITH THE ACI "MANUAL OF STANDARD PRACTICE FOR DETAILING REINFORCED CONCRETE STRUCTURES" SPECIFICATIONS. CONTINUOUS REBAR TO BE LAPPED ACCORDINGLY.
4. ALL REINFORCING CONCRETE SHALL BE NORMAL WEIGHT CONCRETE WITH A 28 DAY COMPRESSIVE STRENGTH OF 4000psi.
5. FORM TIES SHALL BE OF STYLE THAT CAN BE BROKEN 1" FROM EXPOSED FACE OF WALL.
6. ALL TIE POCKETS SHALL BE GROUTED AFTER FORM TIES ARE BROKEN.
7. WALLS SHALL NOT BE BACK FILLED FOR AT LEAST SEVEN (7) DAYS.
8. CONCRETE SHALL HAVE 5.0% TO 8.0% AIR ENTERTAINMENT.

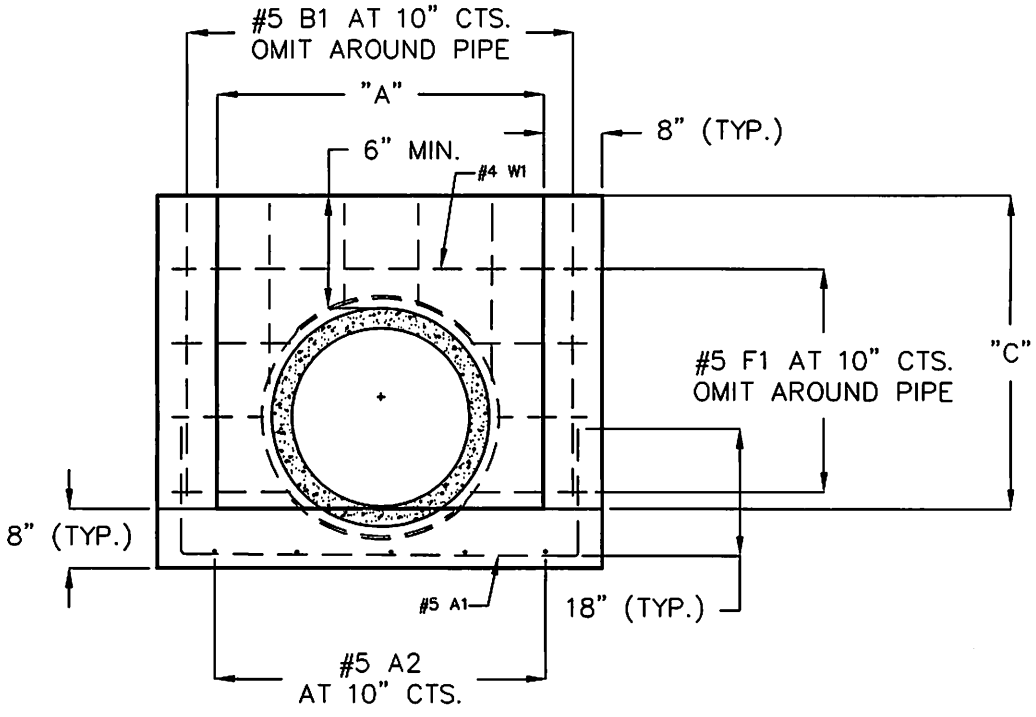

SECTION A–A

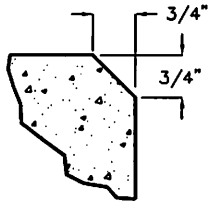

CHAMFER DETAIL

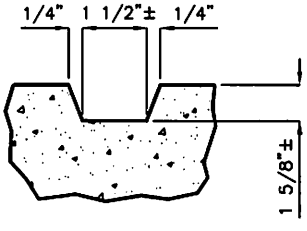

KEYED JOINT

0° TO 30° SKEW END SECTION DIMENSIONS			
PIPE SIZE	"A"	"B"	"C"
15"	2'–6"	2'–6"	2'–2"
18"	3'–0"	3'–6"	2'–6"
21"	3'–6"	4'–6"	2'–9"
24"	4'–0"	5'–6"	3'–0"
30"	4'–6"	6'–6"	3'–7"
36"	5'–0"	8'–0"	4'–2"
42"	6'–10"	9'–6"	4'–9"
48"	6'–0"	10'–0"	5'–4"

NO:	DATE:	REVISION AND DESCRIPTION
1	8/2007	REVISED END SECTION SIZES

CONCRETE END SECTION DETAILS

STANDARD DETAILS

CHECKED BY:

DRAWN BY:

DATE:

City of Jefferson
DEPARTMENT OF PUBLIC WORKS
ENGINEERING DIVISION

SHEET NUMBER
3 OF 3
SECTION
48.03

48.03.DWG